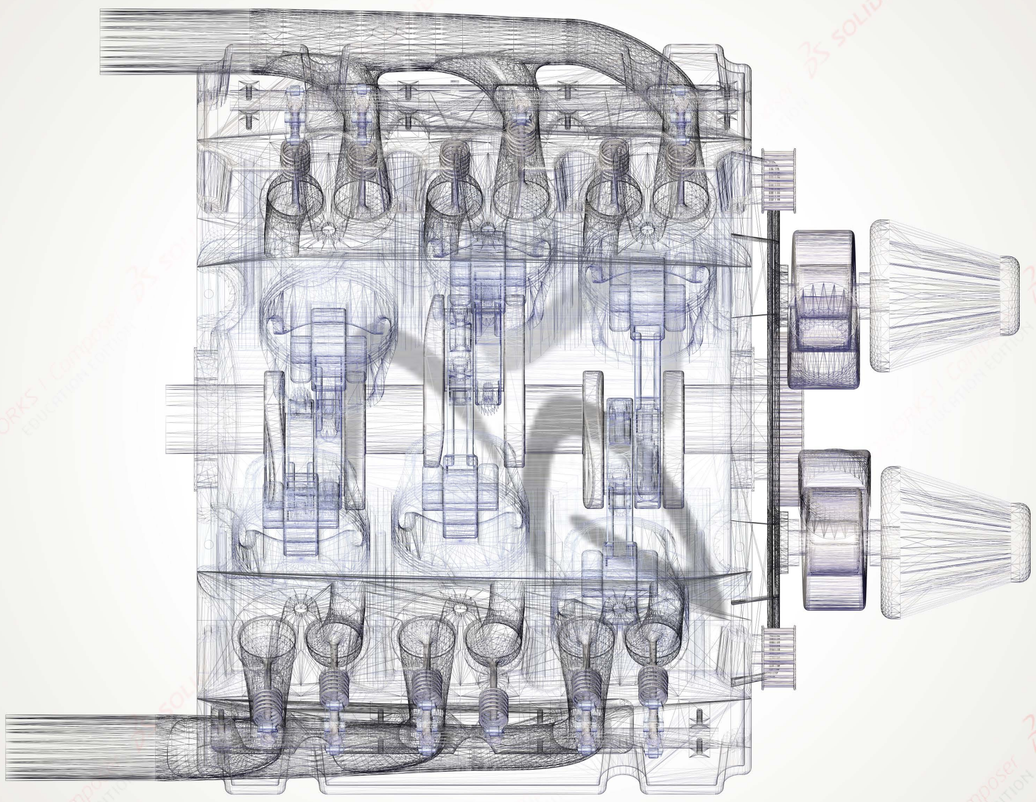

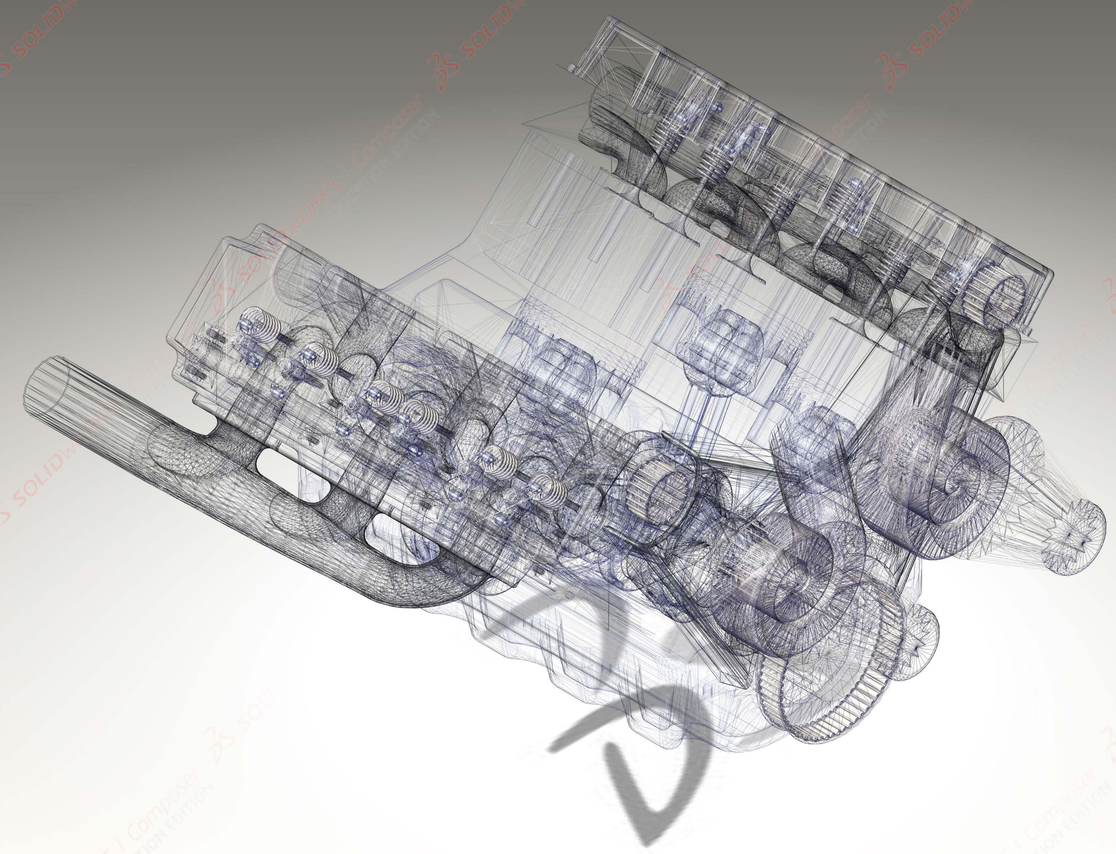

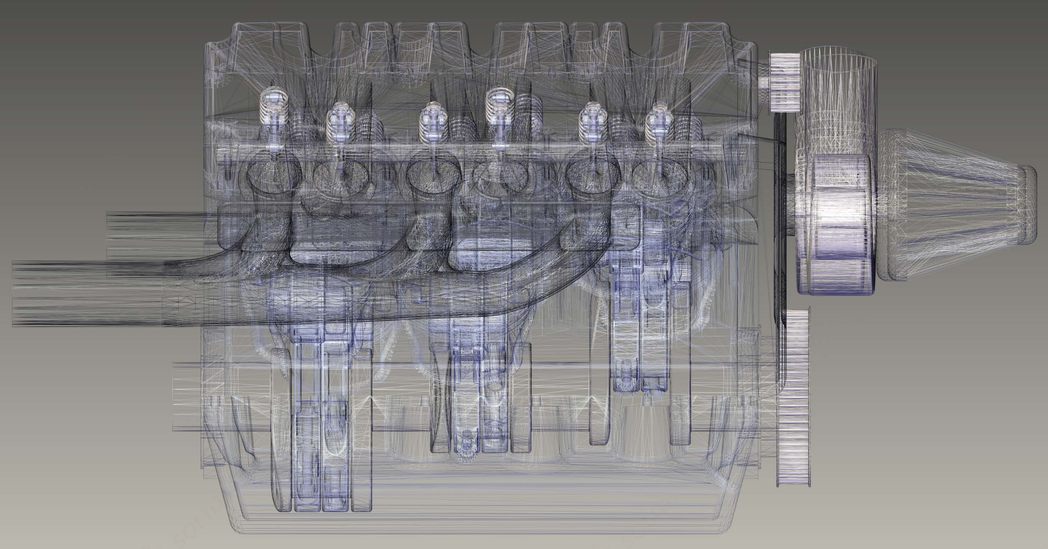

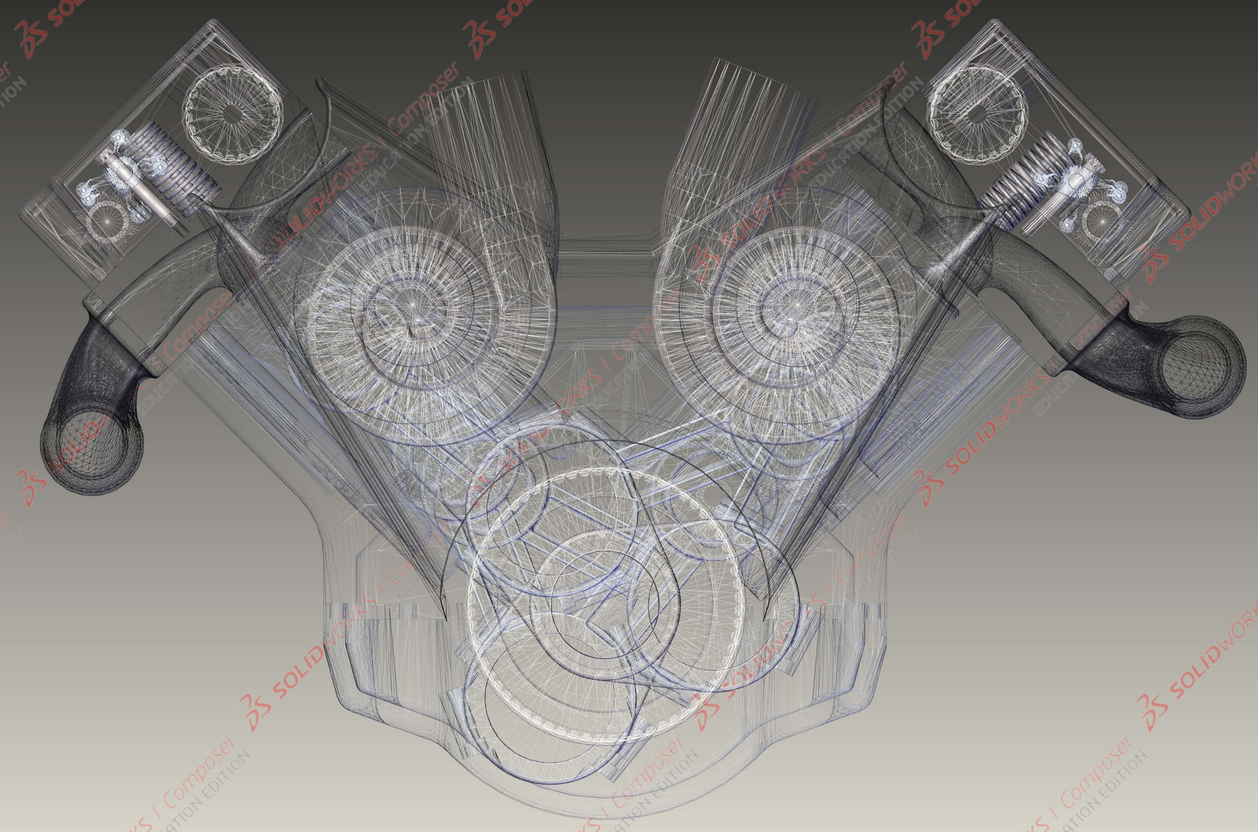

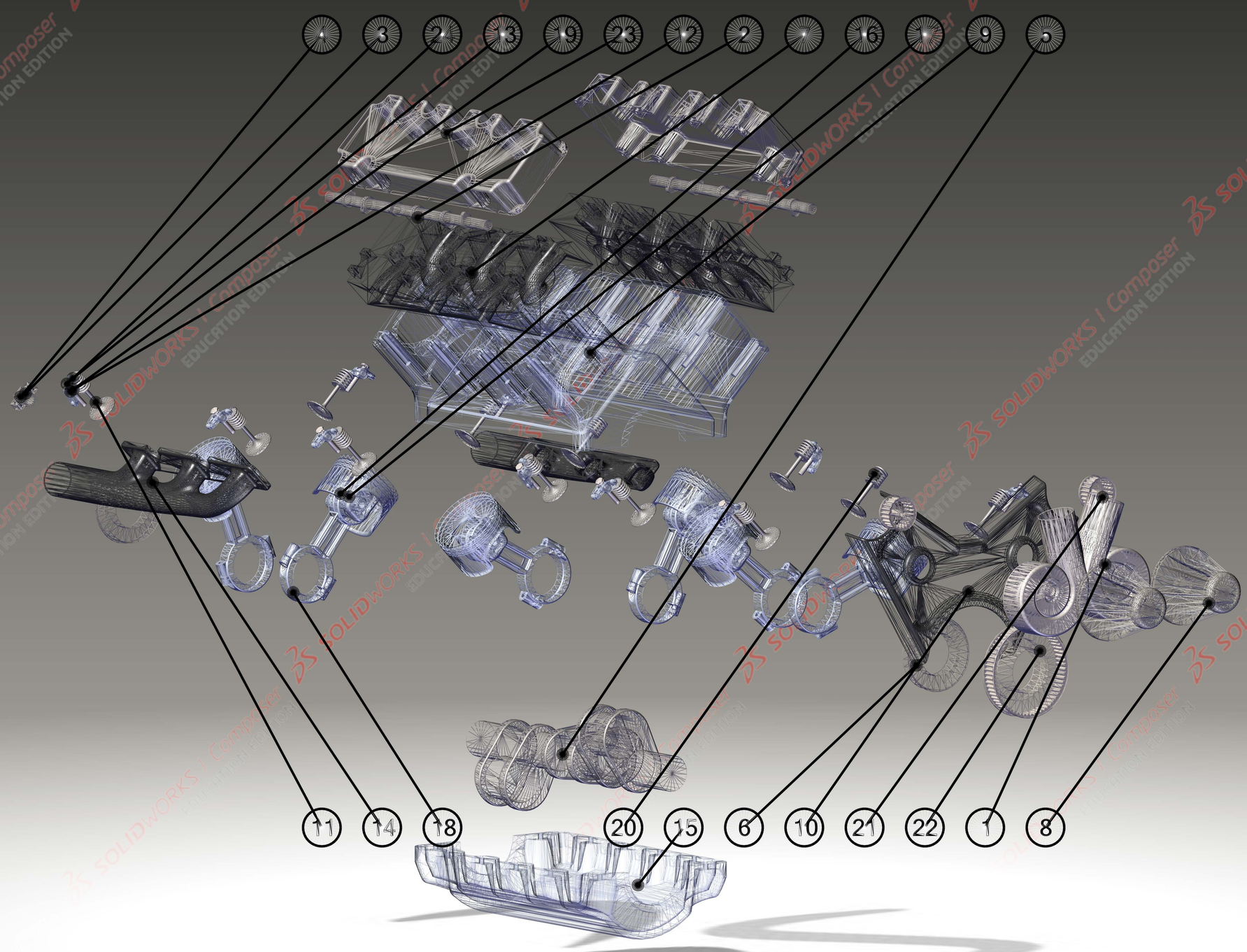

Description	BOM ID	Qty
Air Turbo	1	2
Camshaft	2	2
Camshaft Bushing	3	1
Camshaft Retainer	4	1
Crankshaft	5	1
Crankshaft Bushing	6	2
Cylinder Head	7	2

Description	BOM ID	Qty
Engine Air Filter	8	2
Engine Block	9	1
Engine Front Cover	10	1
Engine Valve	11	12
EngineRockerArmPin	12	30
EngineRockerArmRoll	13	20
Exhaust Manifold	14	2

Description	BOM ID	Qty
hex screw gradeab fine_iso	24	10
Oil Pan	15	1
PistonHead	17	6
PistonPin	16	6
PistonRod	18	12
Rocker Arm Backing Spring	20	12
RockerArm	19	10

Description	BOM ID	Qty
Side Pulley	21	2
Synchronous Pulley	22	1
Valves Cover	23	2

SOLIDWORKS | Composer EDUCATION EDITION

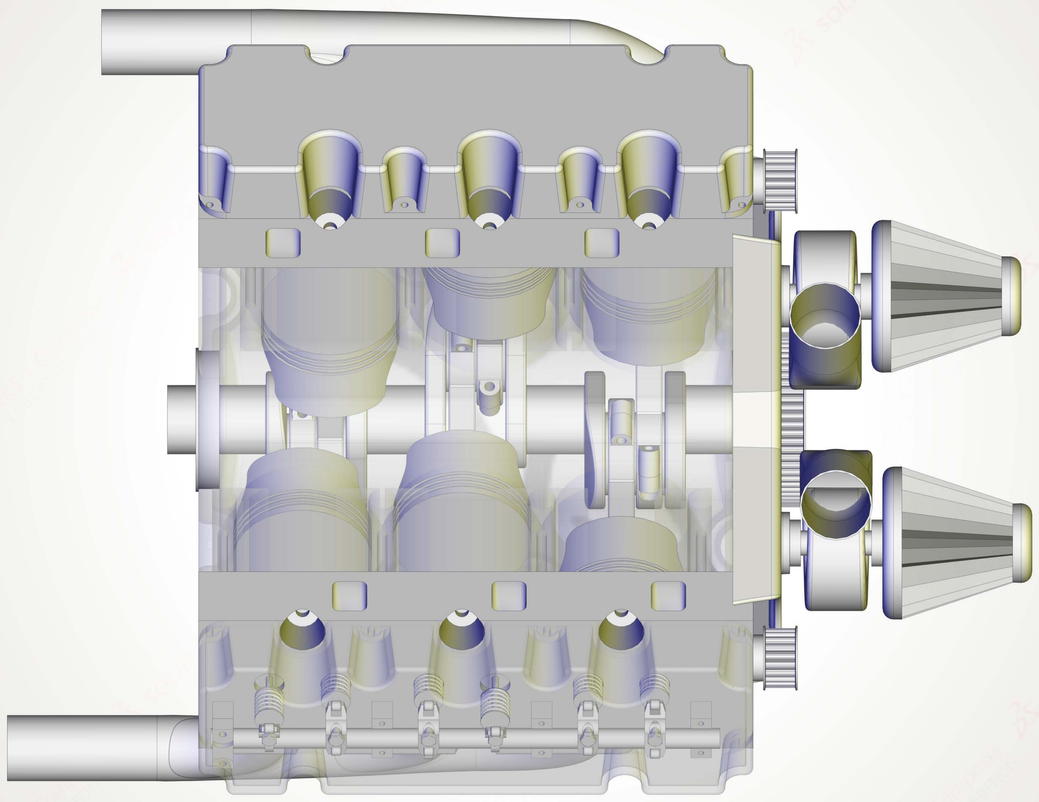

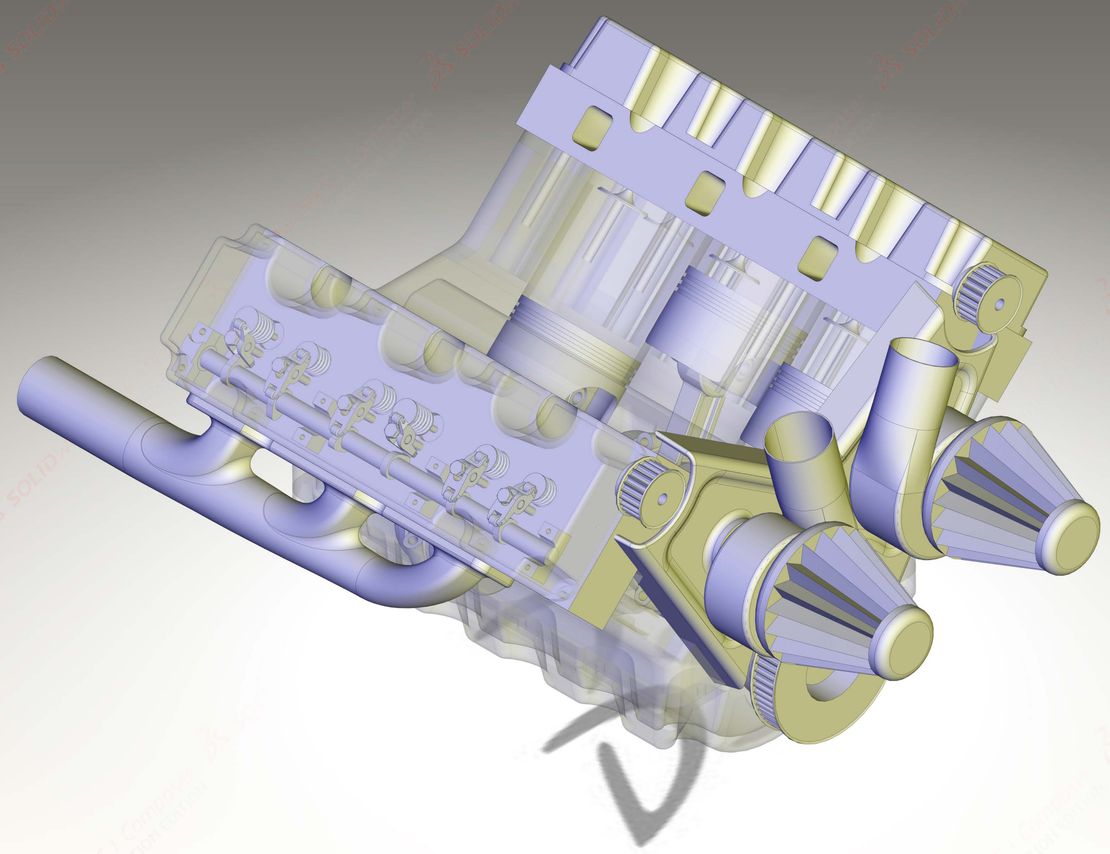

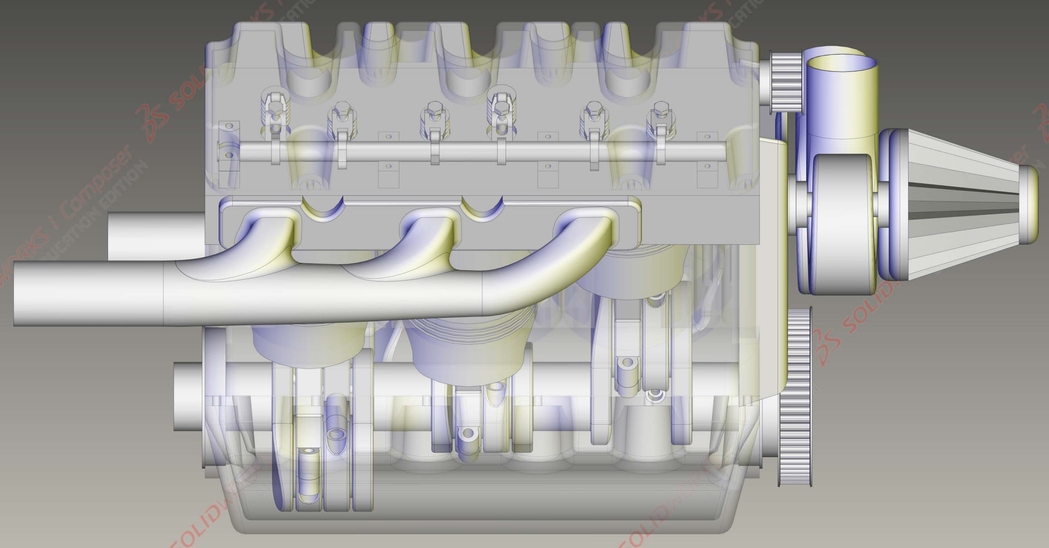

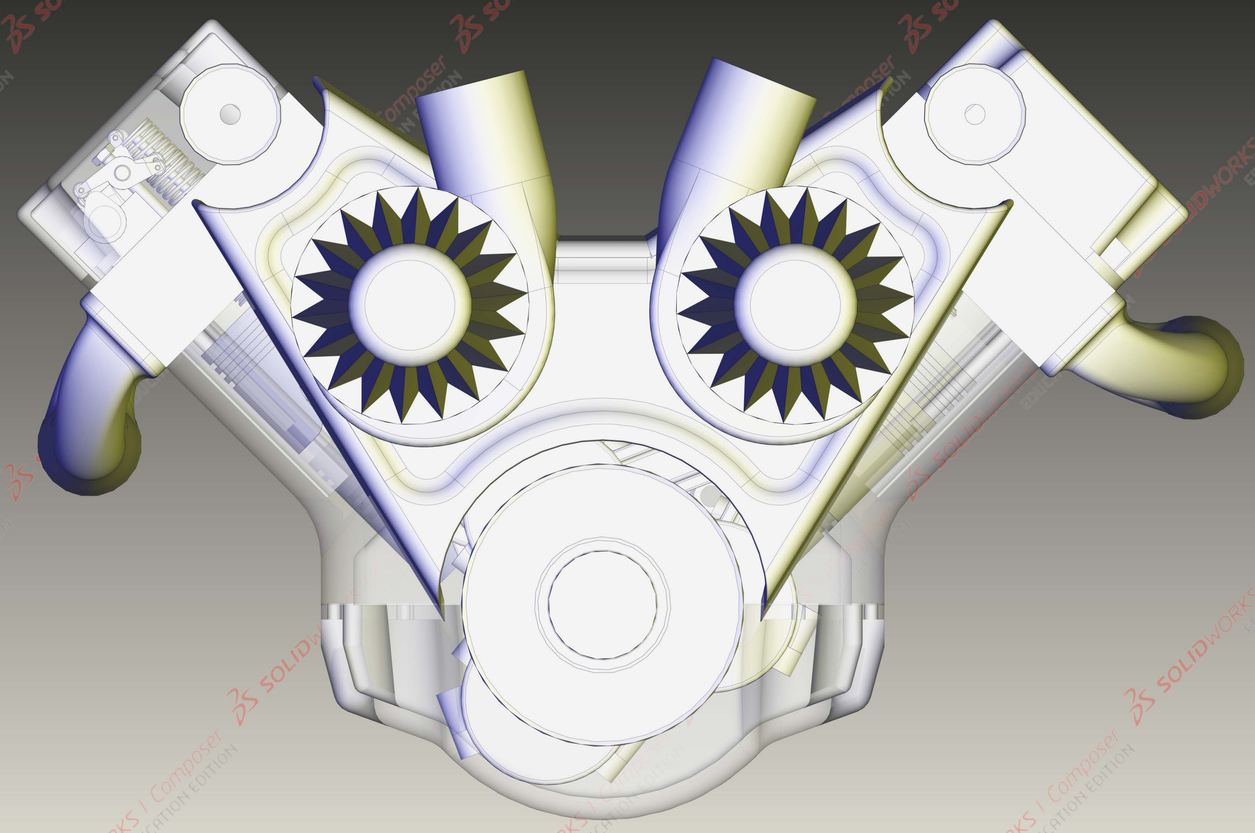

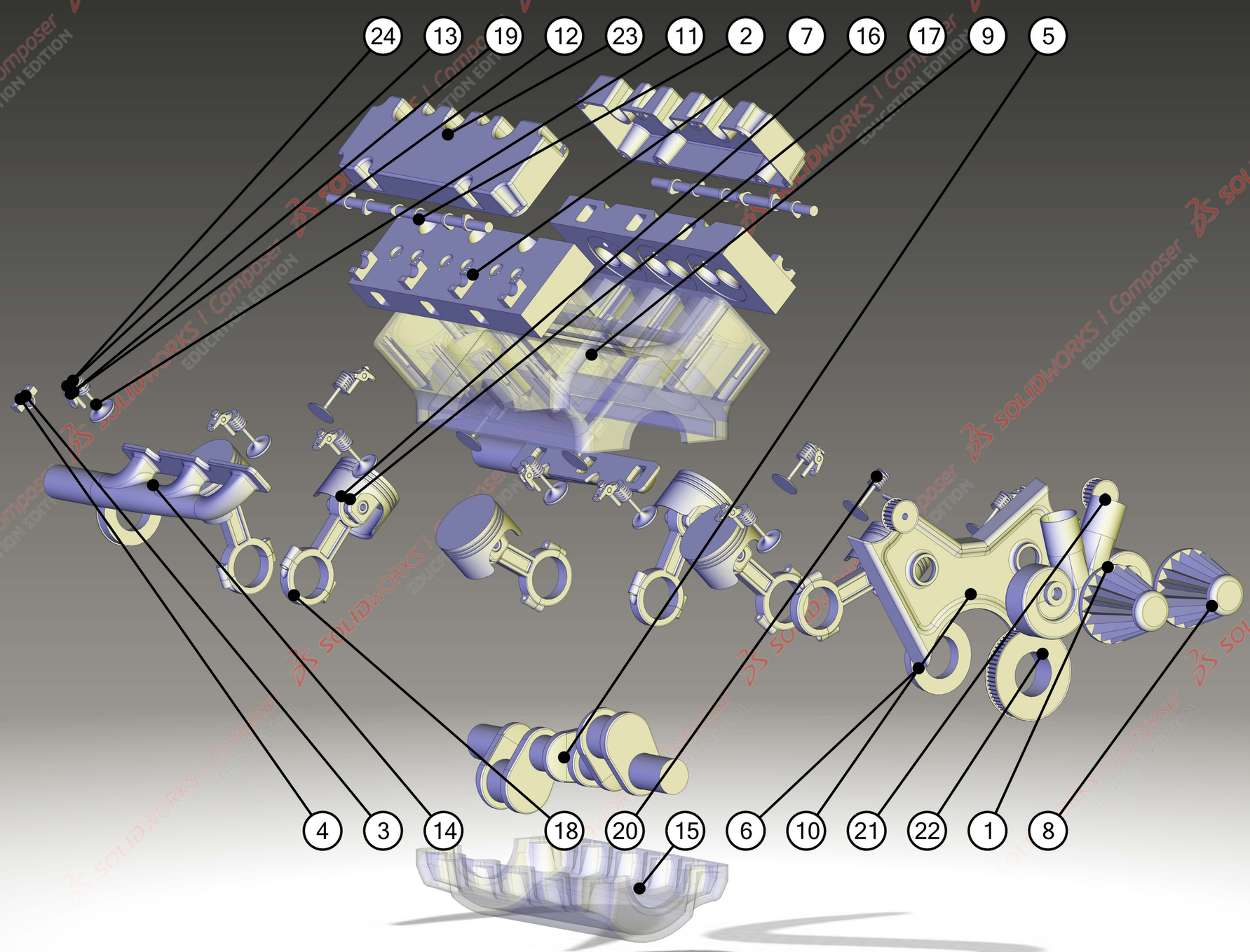

Description	BOM ID	Qty
Air Turbo	1	2
Camshaft	2	2
Camshaft Bushing	3	1
Camshaft Retainer	4	1
Crankshaft	5	1
Crankshaft Bushing	6	2
Cylinder Head	7	2

Description	BOM ID	Qty
Engine Air Filter	8	2
Engine Block	9	1
Engine Front Cover	10	1
Engine Valve	11	12
EngineRockerArmPin	12	30
EngineRockerArmRoll	13	20
Exhaust Manifold	14	2

Description	BOM ID	Qty
hex screw gradeab fine_iso	24	10
Oil Pan	15	1
PistonHead	17	6
PistonPin	16	6
PistonRod	18	12
Rocker Arm Backing Spring	20	12
RockerArm	19	10

Description	BOM ID	Qty
Side Pulley	21	2
Synchronous Pulley	22	1
Valves Cover	23	2

SOLIDWORKS | Composer EDUCATION EDITION