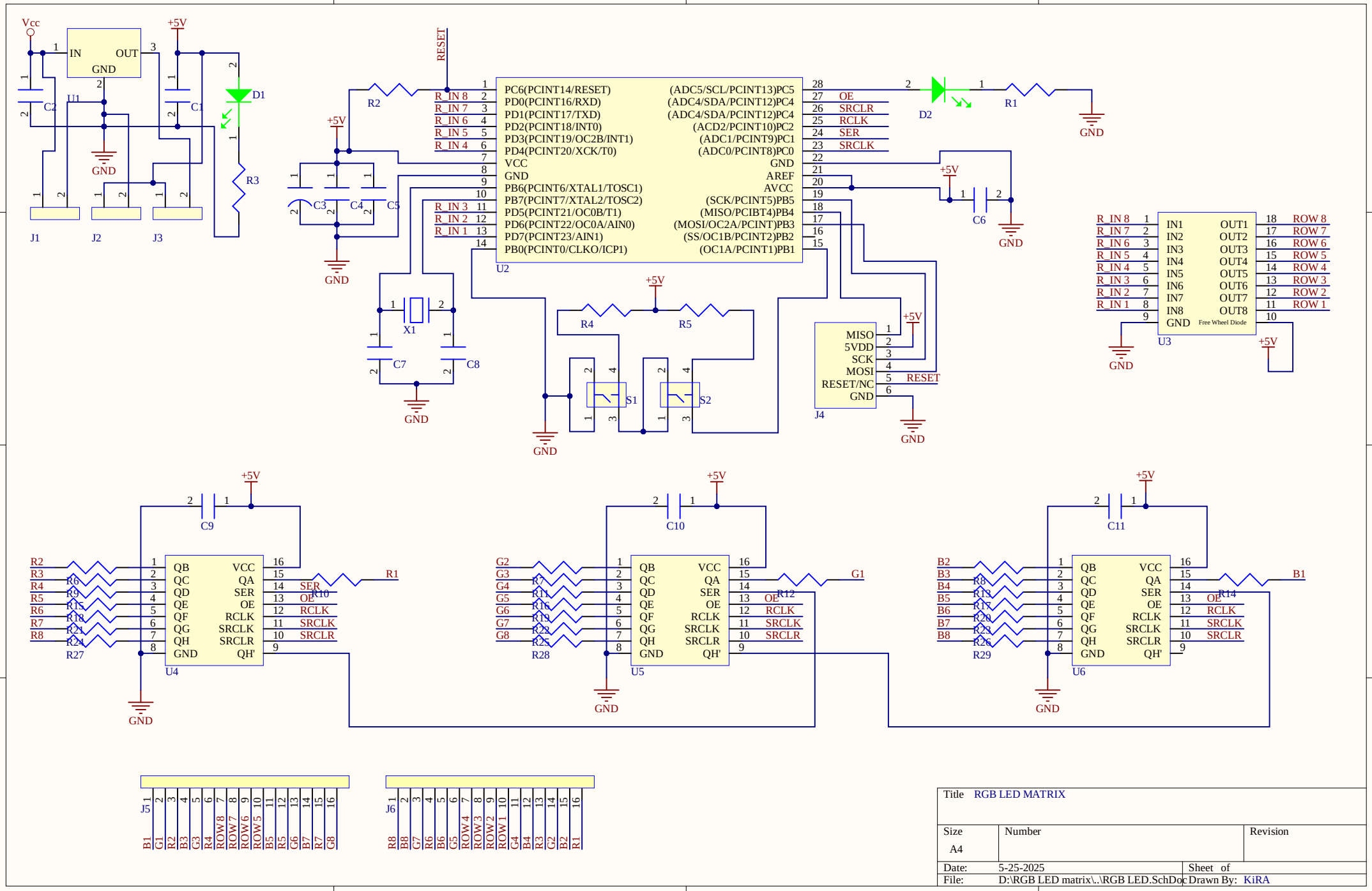

Title	RGB LED MATRIX	
Size A4	Number	Revision
Date: 5-25-2025	Sheet of	
File: D:\RGB LED matrix\..\RGB LED.SchDoc	Drawn By: KiRA	