SUMMER INTERNSHIP REPORT

August 2, 2019

Kirutiga Srikanda Prabanna Balan
Summer Intern
Department of Robotics engineering, DGIST

Contents

0.1 Introduction 2
0.2 Background and Motivation 2
0.3 Weekly Work Progress 5
0.4 Results and Discussion 6

0.1 Introduction

Blood perfusion plays a major role in human health monitoring. Micro circulation of blood ensures transport of oxygen and nutrients to tissues. Imbalance in blood perfusion can lead to various diseases like stroke and cerebral infarction[1]. Several tools have been employed by the researchers to study the micro circulation and better imaging techniques are being used to study the blood flow measurement.
Validation of blood flow through experimental setup and simulation techniques is an integral part of this process. In this project, simulation of a flow phantom is carried put in ANSYS Workbench using FLUENT. Flow phantom mimics the biological tissue and has channels which represents the tiny micro vessels. Intralipid is used to obtain blood like properties in the experiment and the flow phantom is made of PDMS.
The simulation yielded a laminar flow in microvasculature, which is in correlation with literature[1]. The report is organised into 4 sections including background and motivation towards the research topic, weekly work progress, followed by results and discussion and references. Apart from my work in simulation of flow phantom, preliminary studies have been carried to apply Monte Carlo simulation to have a better photon detector in case of cSFDI. An approach for photon tracking using Monte Carlo techniques to determine the fraction of photons lost and unidentified by the detector was explored.

0.2 Background and Motivation

Phantoms are standardised biological models with well defined properties, developed to have the properties of a simplified living organism [2]. Study of blood flow properties in capillaries causing micro-circulation is a growing research area which has the potential to identify and cure diseases in preclinical stage. In this interest, modelling and simulation of flow phantom is carried out.

Experimental setup
The experimental setup consists of a phantom, 2 reservoirs, a syringe pump and a phantom housing.
The phantom has 400 channels of diameter 0.7 um each and is used to study the variation in flow with increasing depth. The material used for the phantom is PDMS. The reservoirs play a major role in maintaining constant pressure across the flow cross sectional area and is also used to store the fluid and deliver it at a specified velocity. 2 reservoirs

Figure 1: Fusion 100 syringe pump

Figure 2: CAD model of the syringe pump

are used in order to create a pressure difference to facilitate fluid flow across the phantom. Non pulsatile flow is achieved by the use of syringe pump. the fluid is evenly distributed to the flow phantom through reservoir and is collected back in the second reservoir placed at the other end of the phantom. A housing for the reservoirs and the phantom for compact setup and prevents spillage of fluid.

Figure 3: CAD model of the experimental setup

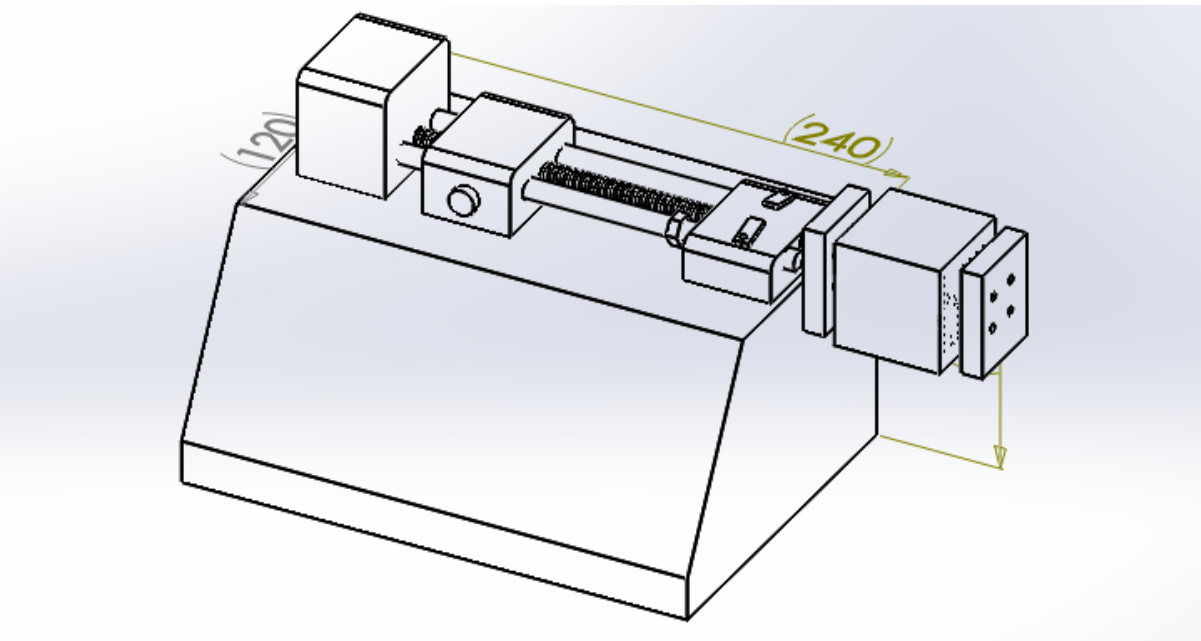

Simulation

Simulation of the flow phantom is carried out in ANSYS WorkBench.The geometry is imported from SolidWorks and meshing is carried out. Smooth transition and adaptive, coarse meshing is employed to reduce the number of nodes and elements. Trade-off between the accuracy and the computational speed has been done. Tetrahedral element is chosen due to higher accuracy near the channels and more coarser mesh is used in regions with minimal surface variations. Navier-stokes equation is used to describe the flow with

Figure 4: Meshed Geometry

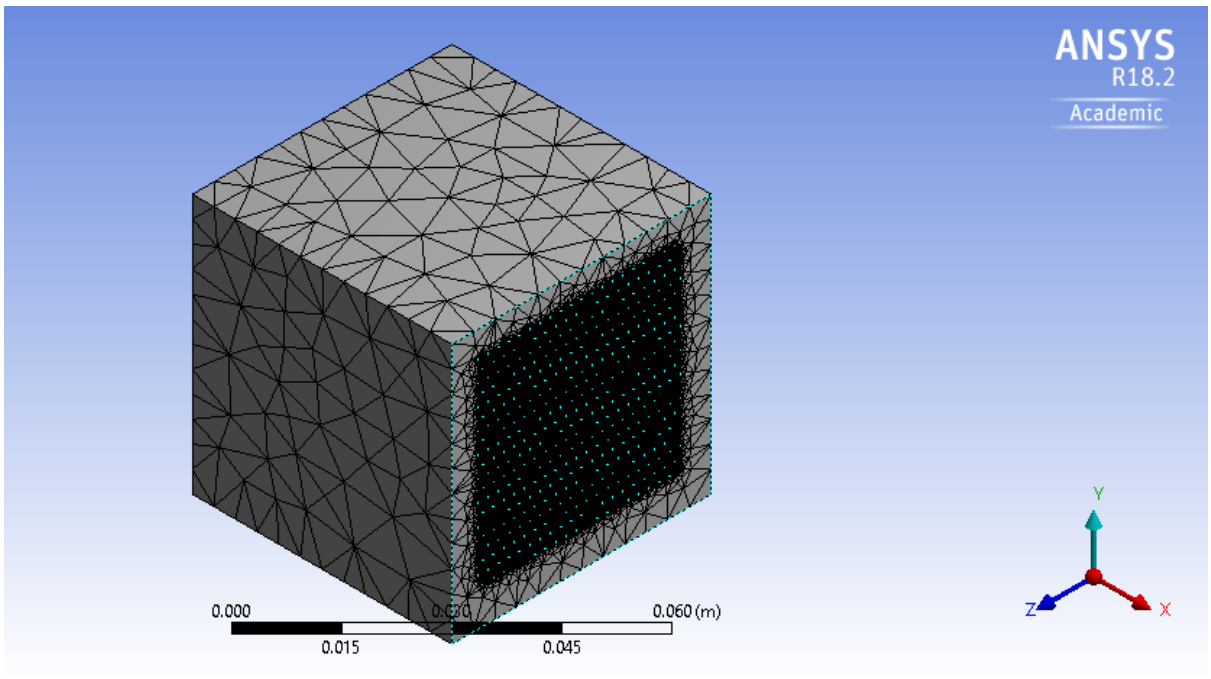

second order accuracy. Use of SIMPLE algorithm by FLUENT is carried out due to the pressure induced nature of flow.

Figure 5: ANSYS Workbench

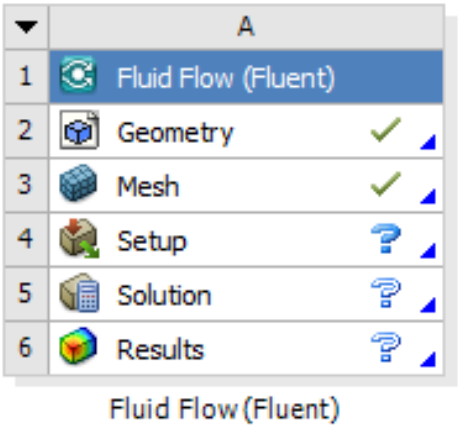

0.3 Weekly Work Progress

WEEK 1

Reading research papers on research topics in IBOM lab

WEEK 2

1. Finalising research area and topic
2. Literature review on the topic
3. Preliminary study on Monte Carlo simulation for application in cSFDI

WEEK 3

1. Modifying the MATLAB code for application in cSFDI
2. Modelling of flow phantom in Solidworks
3. Simulation in ANSYS

WEEK 4

1. Simulation in ANSYS FLUENT
2. CAD modelling of the syringe pump

WEEK 5

1. Post processing
2. CAD modelling of the experimental setup

0.4 Results and Discussion

The velocity of the fluid inside the flow phantom has been obtained after simulation. According to the results, the Reynolds number (Re) of the fluid inside the flow phantom is less than 2000, meaning the flow is laminar. The cell Reynolds number profile is also obtained after the simulation to validate the velocity profile obtained. From figure 7, it can be seen that the reynolds number in each cell of the flow phantom is well below 2000. In regard to the boundary condition, the geometry is said to have a specified shear and has a applied wall shear stress of 1.5Pa. No slip boundary condition cannot be applied in case of blood flow in microvasculature since biological systems have some internal resistance to the flow and the blood pressure will induce shearing action of blood.Variation in the wall shear stress obtained can be used to distinguish between healthy and diseased patients.

References

[1] Bi, Renzhe Dong, Jing Lee, Kijoon. (2013). Multi-channel deep tissue flowmetry based on temporal diffuse speckle contrast analysis. Optics express. 21. 22854-22861. 10.1364/OE.21.022854.

[2] Oliveira, DP Pereira, Wagner Costa-Felix, Rodrigo. (2018). Design, confection and calibration of a flow phantom with ultrasound applications. Journal of Physics: Conference Series. 1044. 012020. 10.1088/1742-6596/1044/1/012020.

[3] Rominger, M. B., MÃijller-Stuler, E. M., Pinto, M., Becker, A. S., Martini, K., Frauenfelder, T., KlingmÃijller, V. (2016). Easy Pulsatile Phantom for Teaching and Validation of Flow Measurements in Ultrasound. Ultrasound international open, 2(3), E93âĂŞE97. doi:10.1055/s-0042-106396

[4] Guoqiang Yu,(2012). âĂIJDiffuse Correlation Spectroscopy (DCS): A Diagnostic Tool for Assessing Tissue Blood Flow in Vascular-Related Diseases and TherapiesâĂİ, Current Medical Imaging 8: 194. https://doi.org/10.2174/157340512803759875

[5] Renzhe Bi, Jing Dong, and Kijoon Lee, "Deep tissue flowmetry based on diffuse speckle contrast analysis," Opt. Lett. 38, 1401-1403 (2013)

[6] Yeo, C., Park, H. C., Lee, K., Song, C. (2015). Avian embryo monitoring during incubation using multi-channel diffuse speckle contrast analysis. Biomedical optics express, 7(1), 93âĂŞ98. doi:10.1364/BOE.7.000093

[7] Fang, Q., Boas, D. A. (2009). Monte Carlo simulation of photon migration in 3D turbid media accelerated by graphics processing units. Optics express, 17(22), 20178âĂŞ20190. doi:10.1364/OE.17.020178

Figure 6: Velocity profile

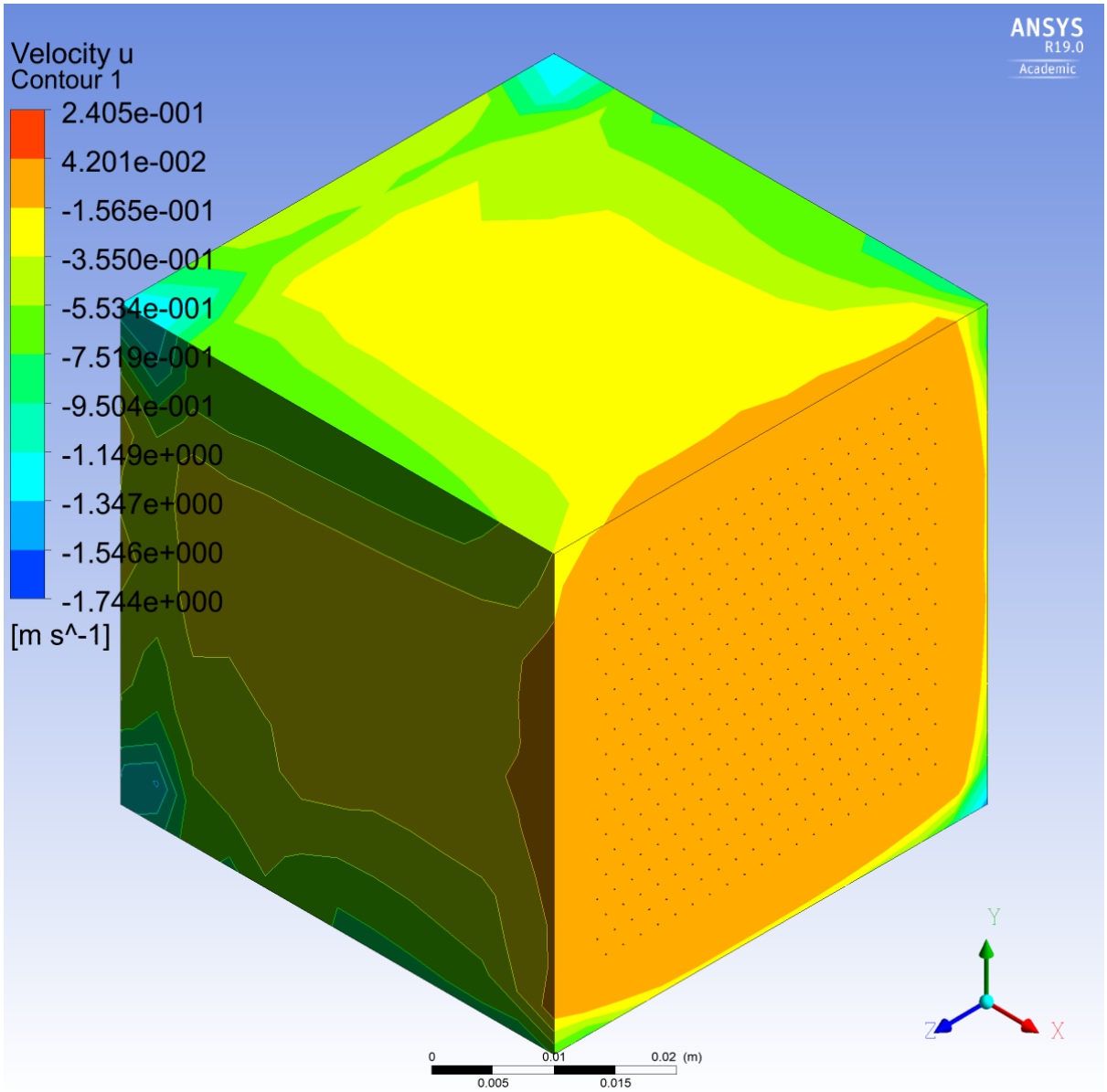

Figure 7: Cell Reynolds Number

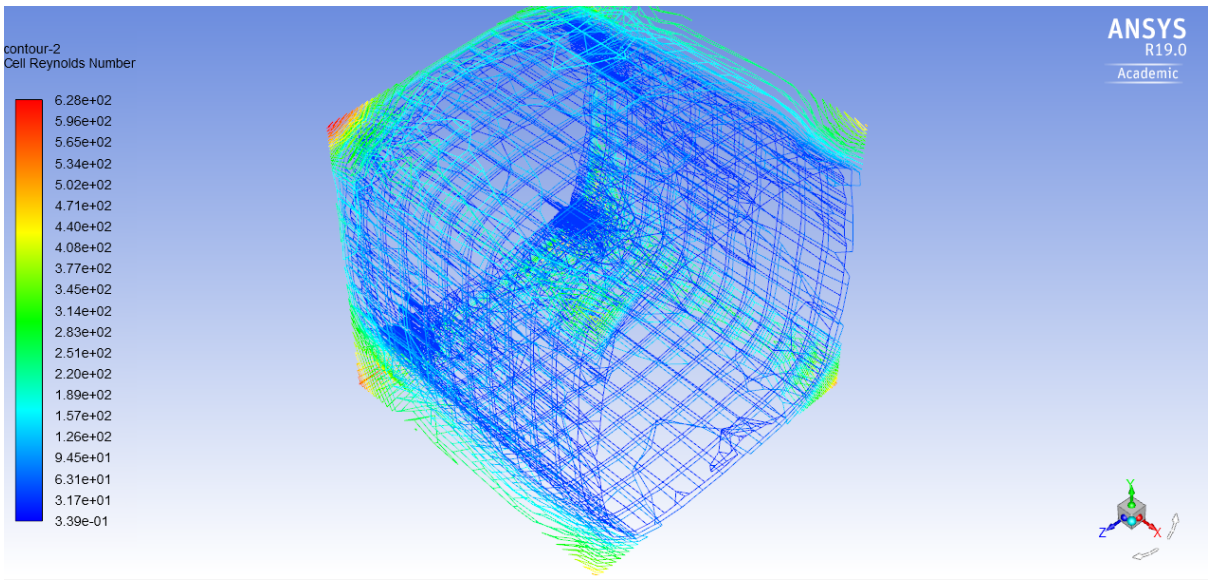
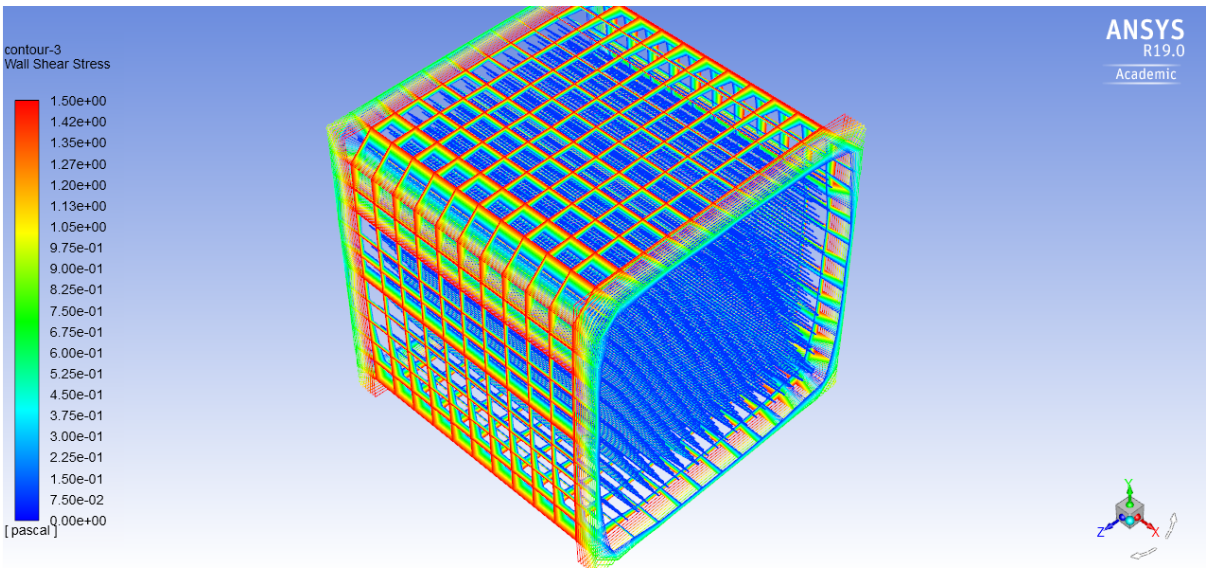
Figure 8: Wall shear stress