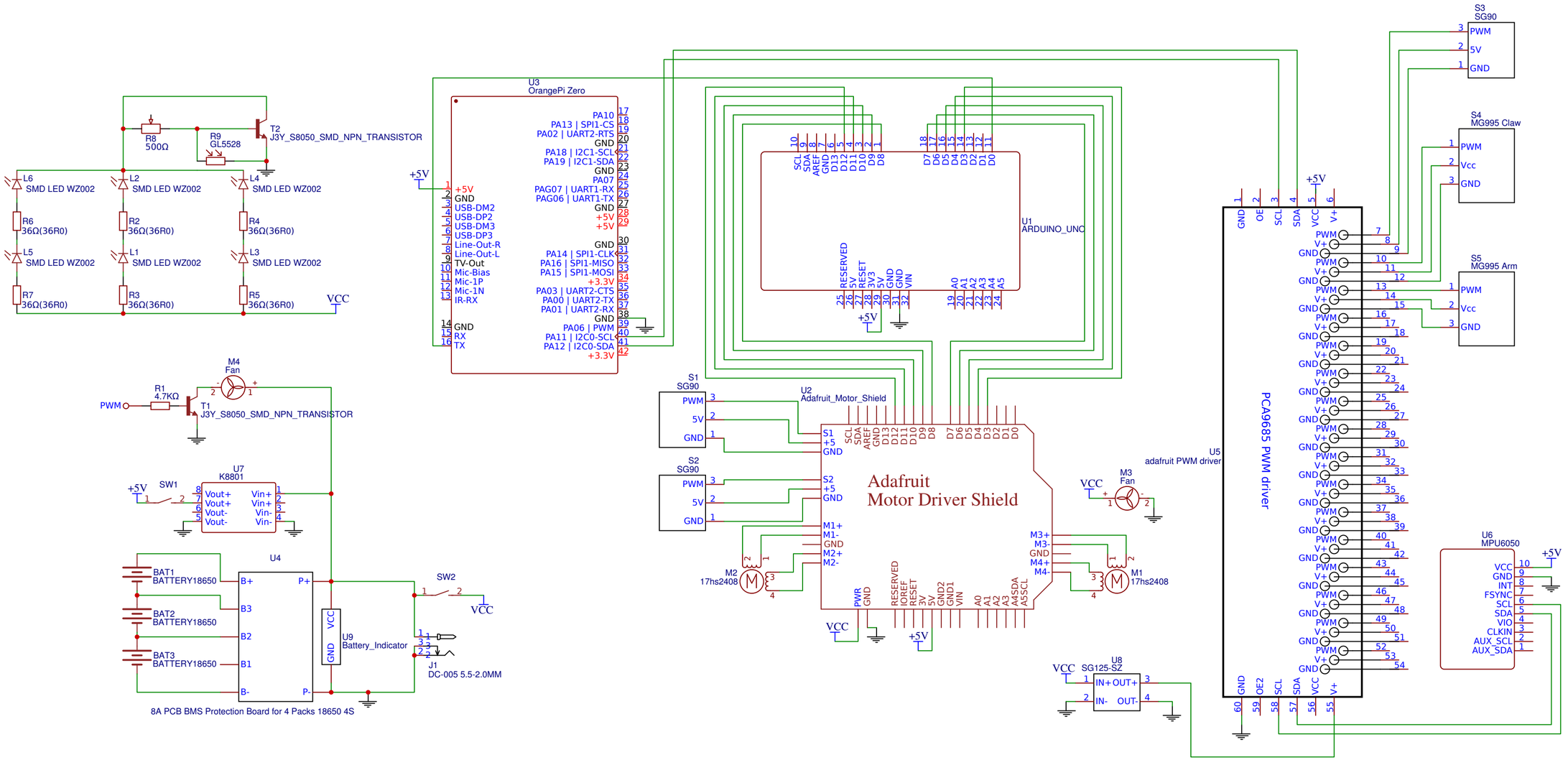

TITLE: Dodo	REV: 1.2
Date: 2018-05-21	Sheet: 1/1
EasyEDA V5.4.9	Drawn By: Kiselev Ivan