Disassembly Chart

15

Scooter Disassembly Chart

Name: Cody Panthaphim
Date: 3/18/19

Part #	Part Name	Qty	Dimensions LENGTH HEIGHT DEPTH	Function	Material	Density	Mass or Weight	Texture and Finish	Interaction with Other Parts	General Notes (i.e.; wear, stress indicators)
1	Back Wheel Pin	1	.54 2.22 .54	Axel for back wheel	Aluminum	2.700 g/cm^3	0.014 lbmass	Smooth	Axel for back wheel	Hole on bottom for screw
2	Bearing	2	.73 .73 .17	Holds Ball Bearings which turn with the pipes, which turn the wheel holder, which turns the wheel	Aluminum	2.700 g/cm^3	0.003 lbmass	Smooth	Holds Ball Bearings	Needs grease
3	Bottom Pipe Connector Screw	1	.37 1.02 .37	Screw for Bottom Pipe Connector	Aluminum	2.700 g/cm^3	0.005 lbmass	rough	Bottom Pipe Connector	
4	Bottom Pipe Connector	1	.67 1.85 1.00	Connects Main Pipe to wheel holder	Aluminum	2.700 g/cm^3	0.077 lbmass	Smooth	Main Pipe to wheel holder	Needs grease
5	Frame Screw	2	.40 .47 .40	Connects Screw Pad to Frame	Aluminum	2.700 g/cm^3	0.002 lbmass		Connects Screw Pad	
6	Front Wheel Bearing/ Washer	1	.50 .50 .04	For front pin/axel screw. Doesn't let it be unscrewed during use	Aluminum	2.700 g/cm^3	0.000 lbmass	Smooth	For fr[illegible] ew	
7	Front Wheel Pin	1	.54 1.32 .54	Axel for front wheel	Aluminum	2.700 g/cm^3	0.007 lbmass	Smooth	Axel fo[illegible] wh[illegible]	Hole on bottom for screw

© 2012 P[illegible] [illegible]ed The Way, Inc.

Part #	Part Name	Qty	Dimensions	Function	Material	Density	Mass or Weight	Texture and Finish	Interaction with Other Parts	General Notes (i.e.; wear, stress indicators)
8	Ball Bearing	32	.16 (Sphere)	Spheres which turn with the pipes, which turn the wheel holder, which turns the wheel	Aluminum	2.700 g/cm^3	0.000 lbmass	Smooth	turn with the pipes	16 per Bearing, small
9	Bearing Holder Nut	1	1.78 1.78 .45	Connects Wheel Holder to Pipe Holder. Secures bearing in place	Aluminum	2.700 g/cm^3	0.034 lbmass	Smooth	Connects Wheel Holder to Pipe Holder	Needs grease
10	Handle	2	1.42 1.42 5.25	For grip during use	Aluminum and PVC	1.950 g/cm^3	0.316 lbmass	Smooth and rough	Secondary Pipe	Soft handle parts
11	Hinge	1	3.70 2.12 1.50	Holds Pipe Holder	Aluminum	2.700 g/cm^3	0.112 lbmass	Smooth	Holds Pipe Holder	Peeling stickers, scratches on inside
12	Hinge Hex Screw	1	.44 .44 .44	Screw that stops Pipe Holder from going too far forward	Aluminum	2.700 g/cm^3	0.00[illegible] lbmass	[illegible]	stops Pipe Holder from going too far forward	
13	Hinge Pin	1	.43 1.61 .43	For connecting Hinge to Pipe Holder	Aluminum	2.700 g/cm^3	0.0[illegible] lbmass	Smooth	Hinge to Pipe Holder	Notch at the end
14	Hinge Screw Nut	1	.33 .33 .17	For securing Hinge Hex Screw	Aluminum	2.700 g/cm^3	0.001 lbmass	Smooth	Hinge Hex Screw	
15	Hinge Screws	4	.41 .62 .41	Screws for Hinge	Aluminum	2.700 g/cm^3	0.003 lbmass	rough	for Hinge	
16	Main Pipe	1	.57 12.88	Gives length for comfortability. Secondary	Aluminum	2.700 g/cm^	0.108 lbmas	Smooth	Secondary Pipe can go inside of	Fairly strong, scratches

© 2012 Project Lead The Way, Inc.

12

Sketches

20

30

TITLE

Main Body / Frame

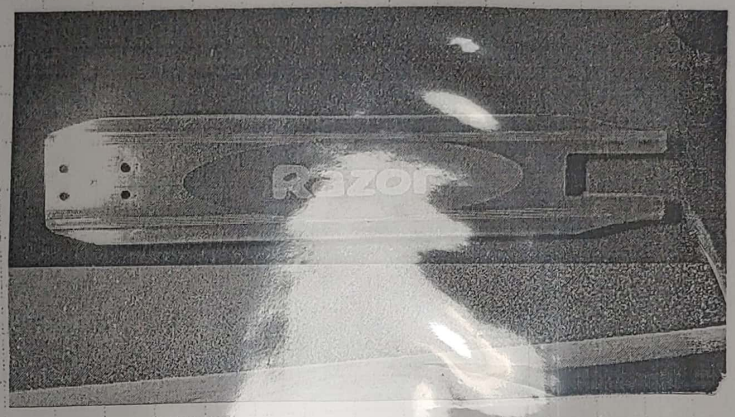

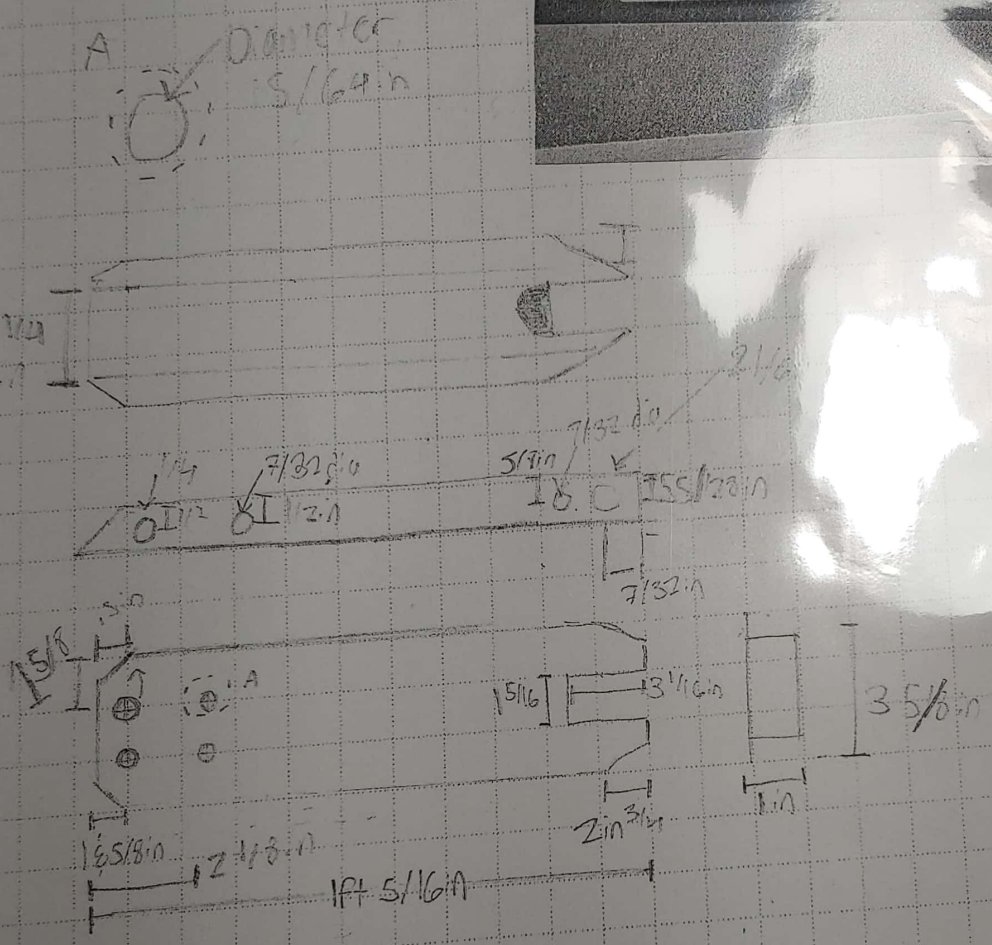

*Notes:

- Thickness of plates: 1/8 for front
5/64 for the rest

DESIGNED BY: Cody P.

DATE 3/19

WITNESSED BY: [illegible]

DATE 3-21-19

PROPRIE
INFORM

All information is th
and solely owned b

TITLE

Pipe Holder

* from inside to inside of outer circle: dia = 1.500
* thickness = .05 in for outer 1.440
* note: 2 holes ⌀ drill

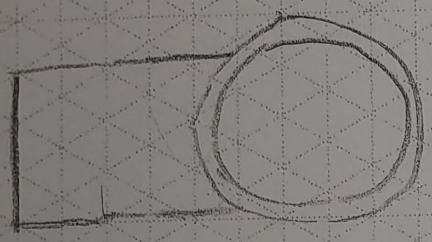

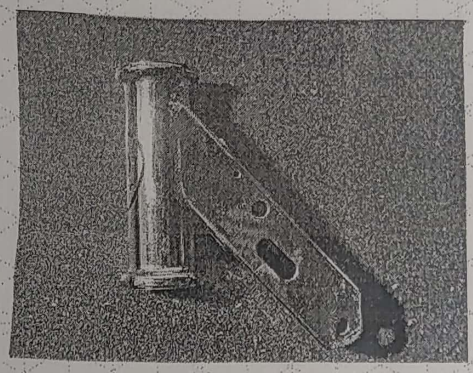

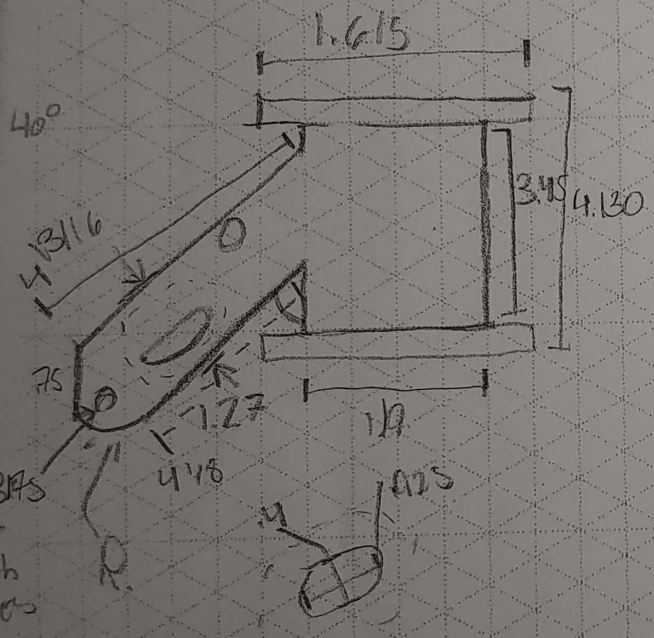

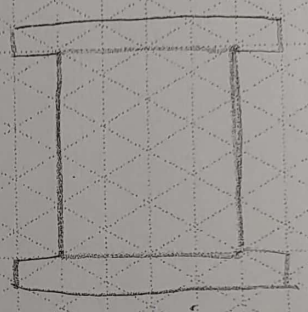

DESIGNED BY: [illegible]

DATE 2-24-19

WITNESSED BY: [illegible]

DATE 3-21-19

PROPRIETARY INFORMATION

All information is the property of, and solely owned by the Designer.

20

TITLE

wheel holder

* pipe thickness: ~~10.100~~ .1

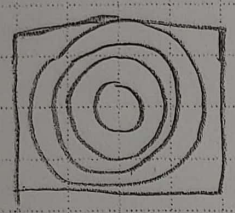

Smooth circles 7125

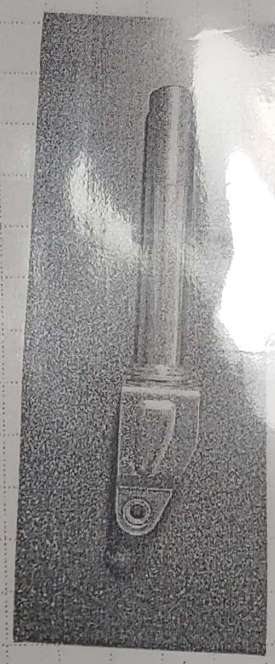

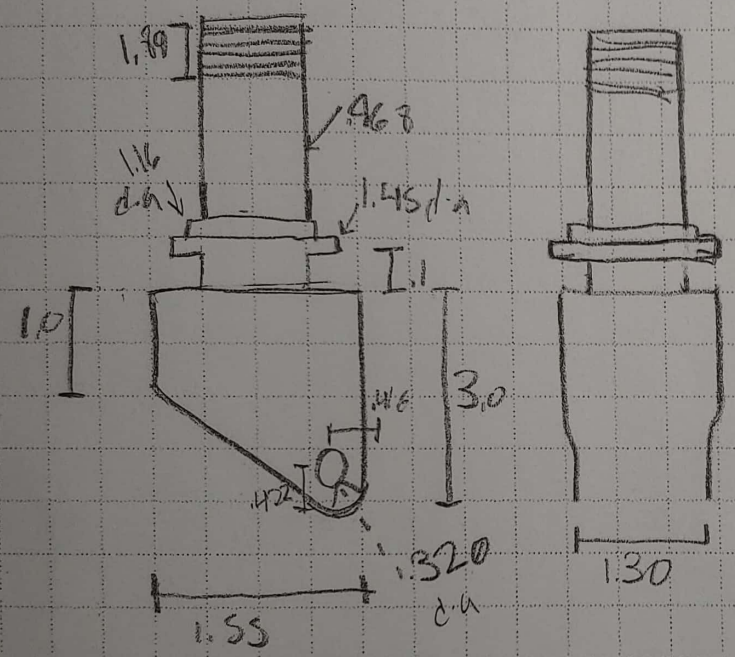

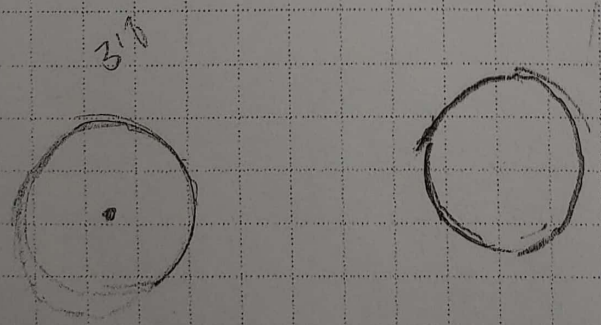

DESIGNED BY: [illegible] P.

DATE 2-24-19

WITNESSED BY: [illegible]

DATE 3-21-19

PROPRIET
INFORMAT
All information is the pr
and solely owned by th

IDWs

40

DRAWN Cody Panthaphim	3/17/2019	Cody Panthaphim Hour:5
CHECKED		TITLE
QA		Scooter Isometric View
MFG		
APPROVED		SIZE D / DWG NO Scooter IDWs / REV
		SCALE 1 / 4 / SHEET 30 OF 30

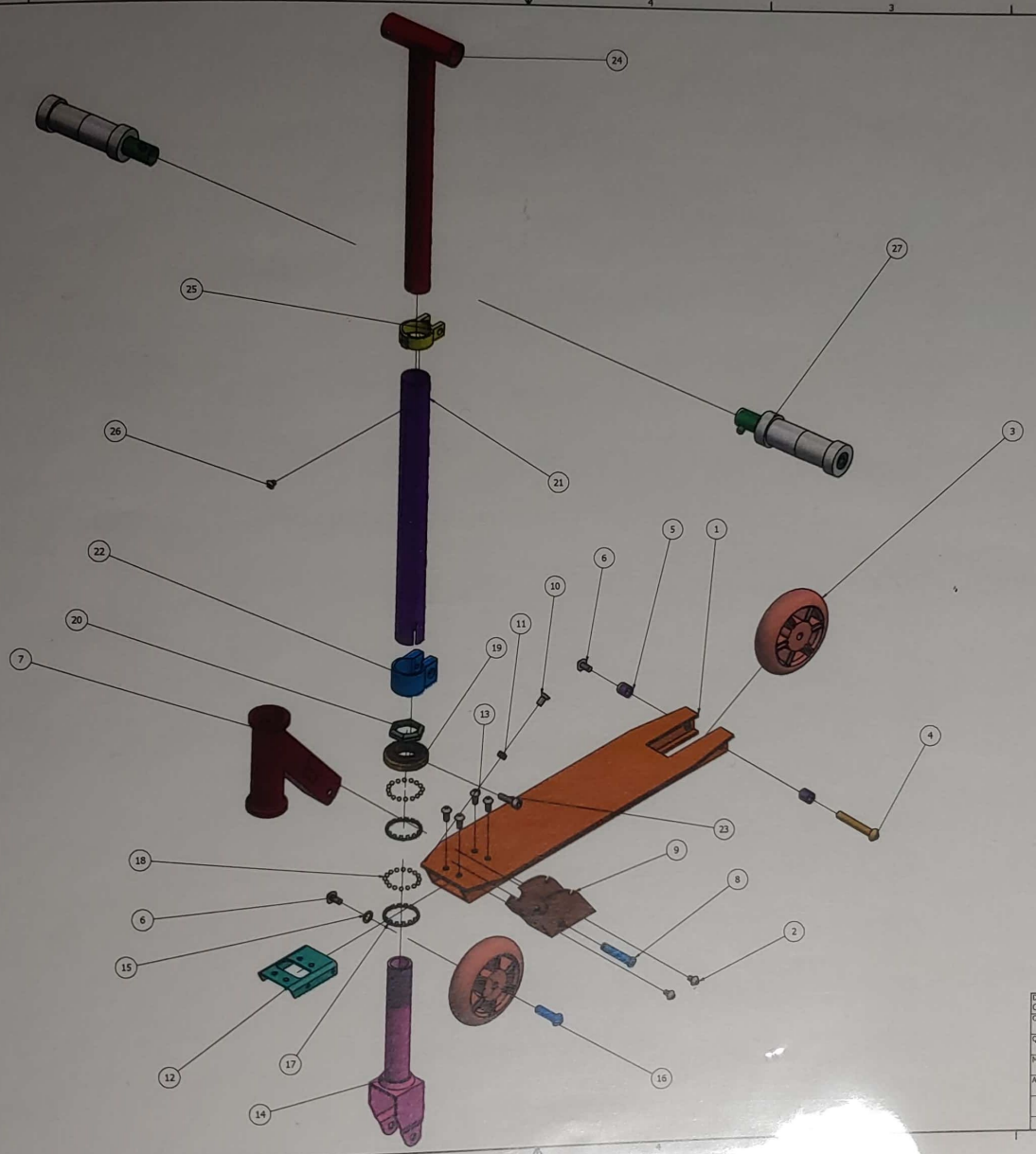

PARTS LIST			
ITEM	QTY	PART NUMBER	DESCRIPTION
1	1	Part_Frame	
2	4	Frame Screw	
3	2	Wheel	
4	1	Back Wheel Pin	
5	2	Wheel Guard	
6	2	Pin Screws	
7	1	Pipe Holder	
8	1	Hinge Pin	
9	1	Hinge	
10	1	Hinge Hex Screw	
11	1	Hinge Screw Nut	
12	1	Screw_Pad	
13	4	Hinge Screws	
14	1	Wheel Holder 3-12-19	
15	1	Front Wheel bearing or washer	
16	1	Front Wheel Pin	
17	2	Bearing V2	
18	32	Ball Bearing	
19	1	Bearing Holder Nut	
20	1	Pipe Hex Nut	
21	1	Main Pipe	
22	1	Bottom Pipe Connector	
23	1	Bottom Pipe Connector Screw	
24	1	Secondary Pipe	
25	1	Top Pipe Connector	
26	1	Top Pipe Connector Screw	
27	2	Handle	

DRAWN Cody Panthaphim	3/17/2019	Cody Panthaphim Hour:5
CHECKED		TITLE
QA		Scooter Assembly Exploded
MFG		
APPROVED		SIZE D / DWG NO Scooter IDWs / REV
		SCALE 3/7 / SHEET 29 OF 30

42

DRAWN Cody Panthaphim	3/17/2019	Cody Panthaphim Hour:5
CHECKED		TITLE
QA		Scooter Full Assembly
MFG		
APPROVED		SIZE D / DWG NO Scooter IDWs / REV
		SCALE 1 / 2 / SHEET 28 OF 30

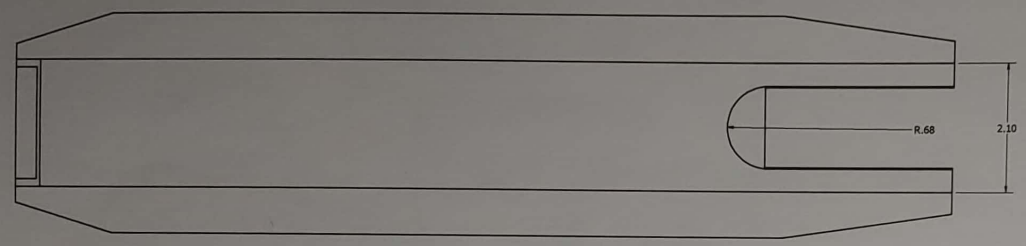

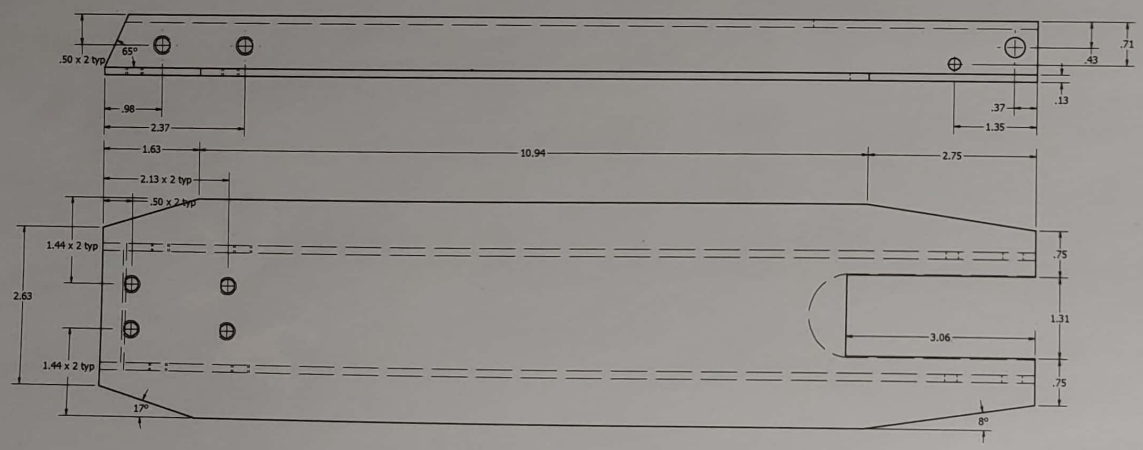

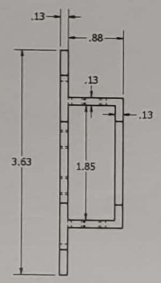

DRAWN Cody Panthaphim	3/17/2019	Cody Panthaphim Hour:5
CHECKED		TITLE
QA		Frame
MFG		
APPROVED		SIZE D / DWG NO Scooter IDWs / REV
		SCALE 1 : 1 / SHEET 10 OF 30

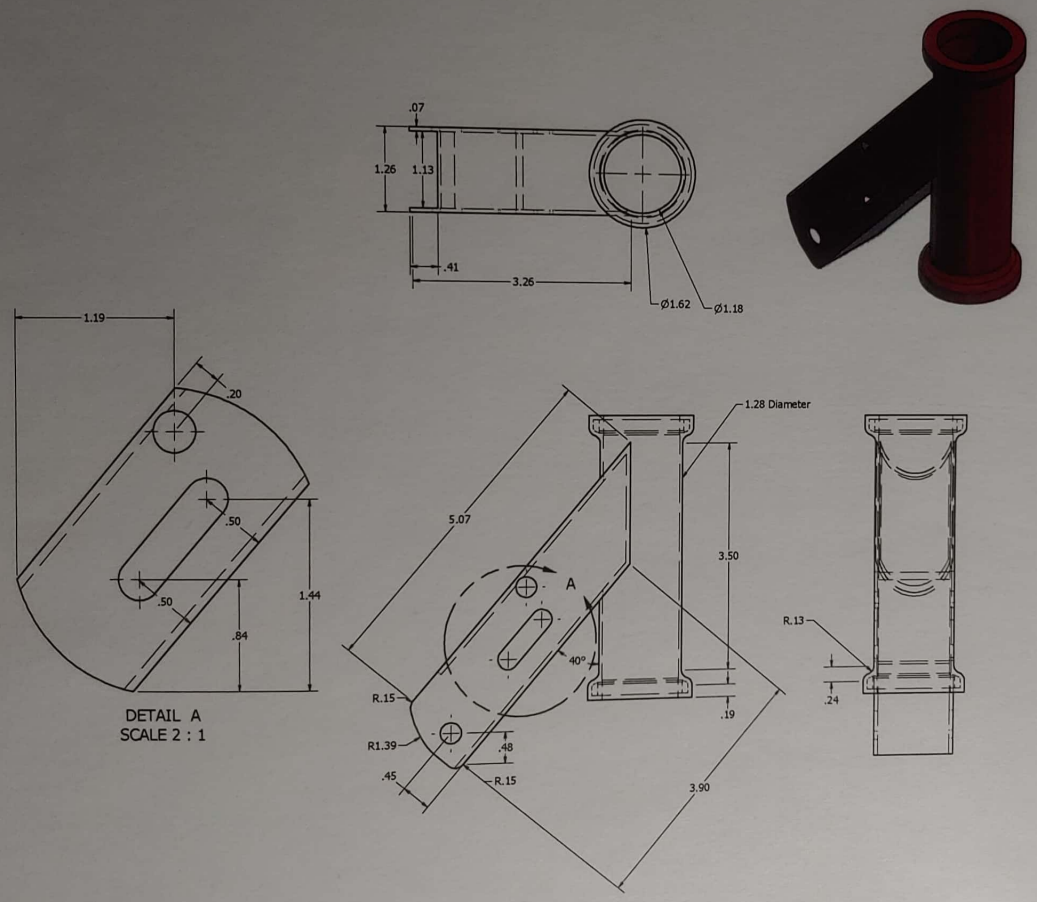

DRAWN Cody Panthaphim	3/17/2019	Cody Panthaphim Hour:5
CHECKED		TITLE
QA		Pipe Holder
MFG		
APPROVED		SIZE D / DWG NO Scooter IDWs / REV
		SCALE 1 : 1 / SHEET 11 OF 30

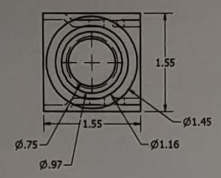

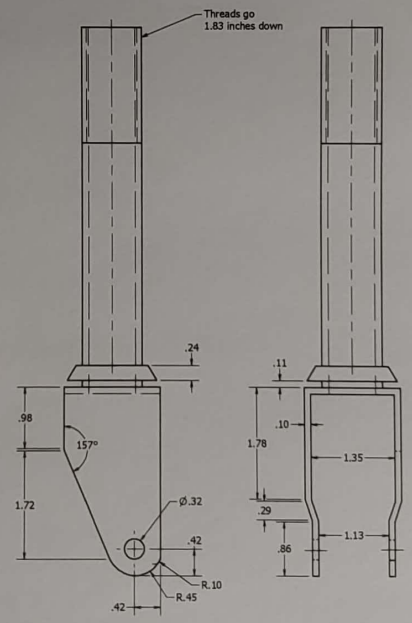

DRAWN Cody Panthaphim	3/17/2019	Cody Panthaphim Hour:5
CHECKED		TITLE
QA		Wheel Holder
MFG		
APPROVED		SIZE D / DWG NO Scooter IDWs / REV
		SCALE 1 : 1 / SHEET 16 OF 30

Innovation

71

PLTW | Engineering

Scooter Innovation

10 Points Possible for Criteria

Ideas	Criteria: Easy of Use	Simple Manufacturing	Accessibility	Size	Detachable	Secure/Safety	Totals
1	9	8	10	9	10	7	53
2	8	5	6	7	10	9	45
3	(ABANDONED)						

© 2012 Project Lead The Way, Inc.

TITLE

Brainstorm Solution #2

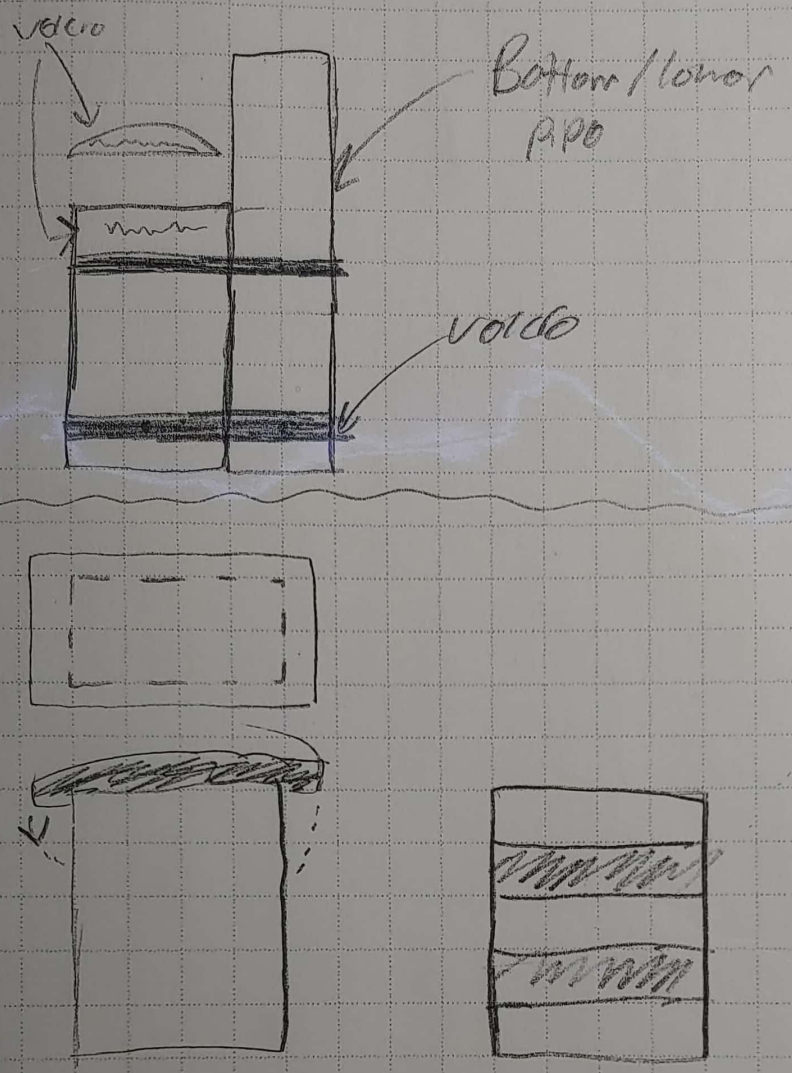

DESIGNED BY: Cody P.

DATE 5/14/19

WITNESSED BY:

DATE 5/14/19

PROPRIE
INFORMA
All information is the
and solely owned by t

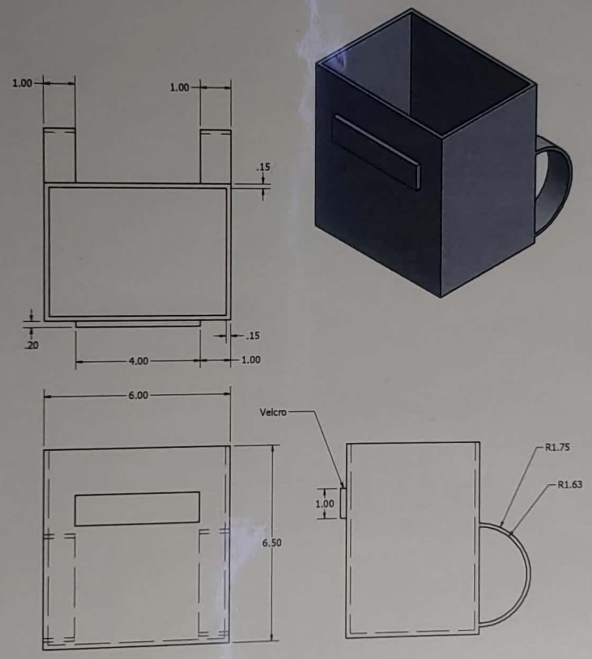

DRAWN 224955	5/16/2019	Cody Panthaphim Hour. 5
CHECKED		TITLE
QA		Container
MFG		
APPROVED		SIZE D / DWG NO Innovation IDWs / REV
		SCALE 1 / 2 / SHEET 1 OF 4

DRAWN 224955	5/16/2019	Cody Panthaphim Hour, S
CHECKED		TITLE
QA		Innovation Assembly
MFG		
APPROVED		SIZE D / DWG NO Innovation IDWs / REV
		SCALE 1 / 4 / SHEET 3 OF 4

XXX