EDD - Package Security

Cody Panthaphim, Owen Diede

Element A - The Problem

- Online deliveries have skyrocketed in recent years
- 43% of Americans have experienced at least one package theft
- $25 million lost a day due to stolen packages
  - Affects consumers and businesses

Package Theft: 2019 vs. 2020

How often does your household receive online deliveries? (Choose the answer that best fits)

46 responses

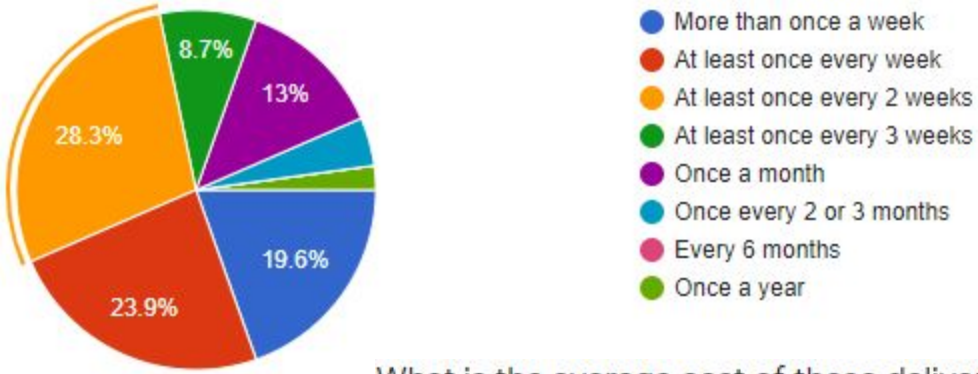

What is the average cost of these deliveries? (Choose the answer that best fits)

46 responses

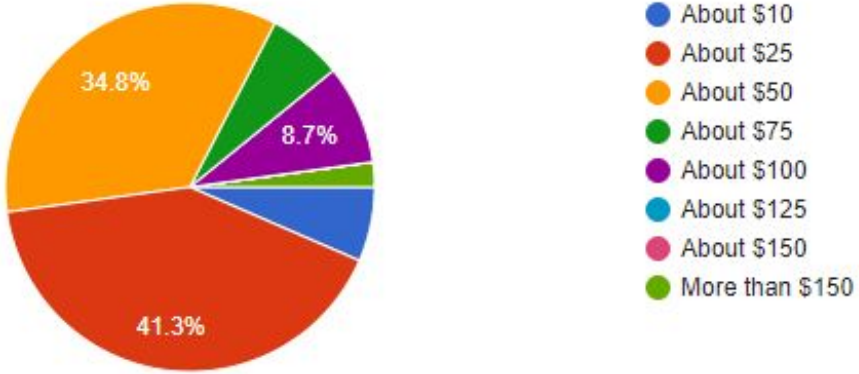

Element B - Prior Solutions

- We found a multitude of varying solutions and ideas
- Each had their own strengths and weaknesses

Element B - Patents

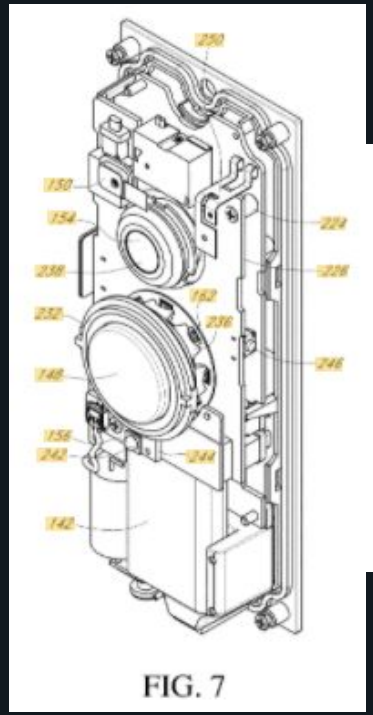

FIG. 7

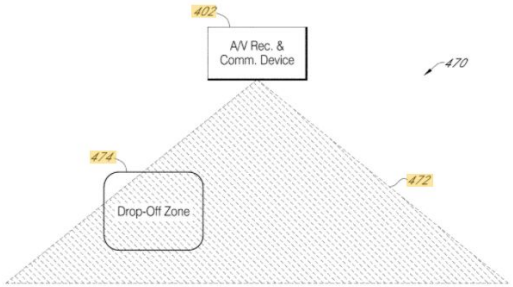

FIG. 27

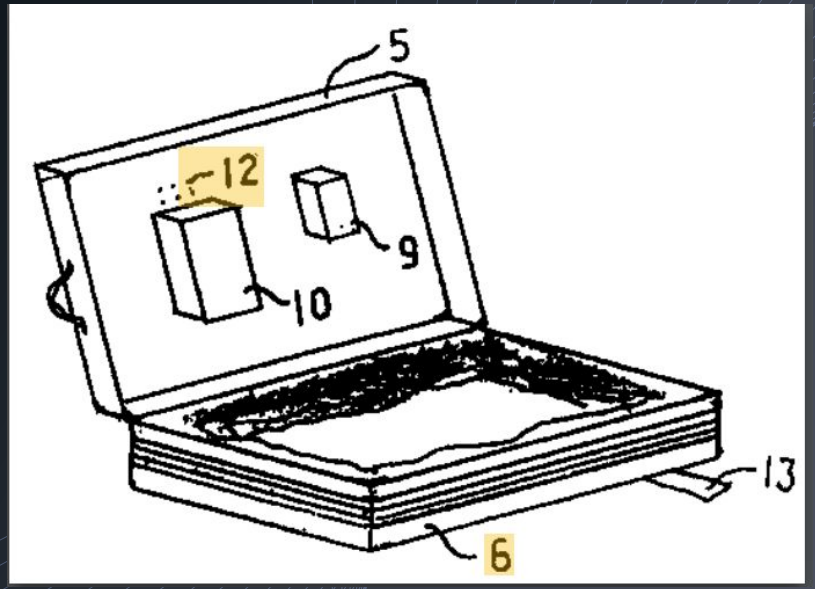

Element B - Products

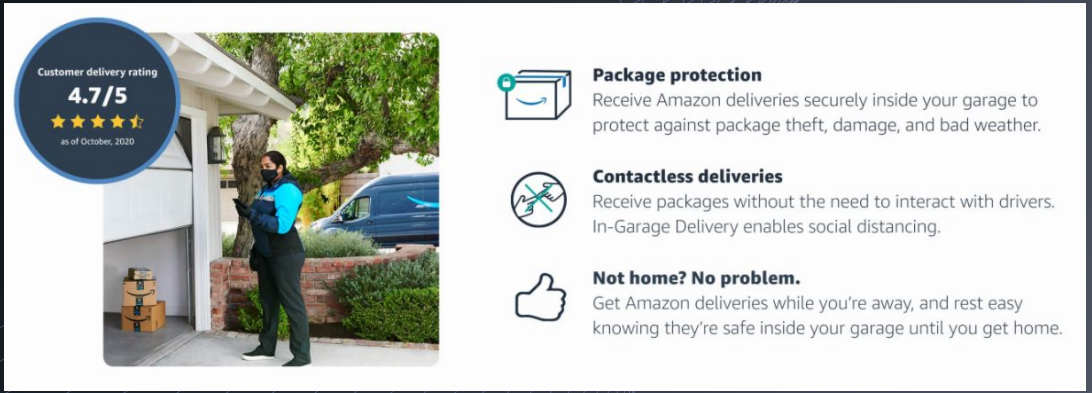

Element C - Design Considerations

- Consider Consumer and Business Perspectives
  - Balance is needed

- Constraints:
  - Costs, Ergonomics, Safety/Legal, Environmental, Aesthetics.

Would you be willing to trade your own time for the safety of your package?

15 responses

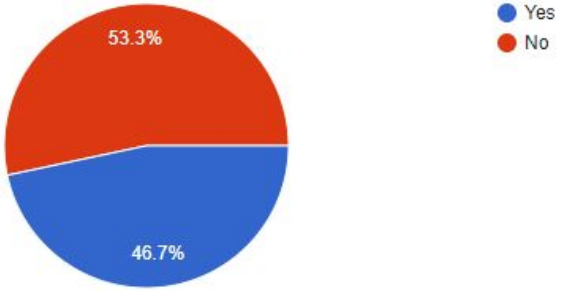

Are you willing to spend more to protect your online deliveries?

15 responses

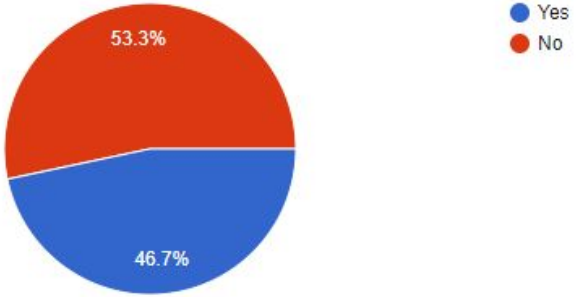

What is the most important aspect of a package?

15 responses

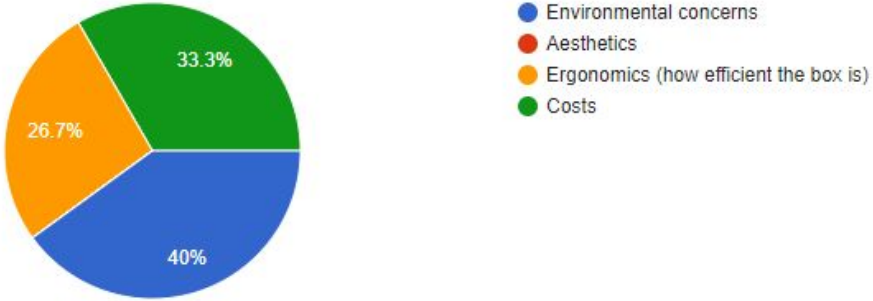

Similar Solution Matrix

Sources	Solutions & Designs	Specifications (Out of 5) 1. Environmental	2. Aesthetics	3. Safety/Legal	4. Costs	5.Ergonomics				Sum	10	11	12	13	14	15	16	17
Spytec	Gps Tracker	3	3	4	4	5				19								
Keter	Secure Delivery Box	4	4	3	3	3				17								
Buckthorn	Ship/Storage Container	3	4	4	3	4				18								
Amazon	Amazon Key	5	4	1	4	3				17								
US20180114420A1	Audio/Video/GPS Device	3	3	4	3	3				16								
JP2004130456A	Delivery container	4	3	4	4	3				18								

Experts	1. Officer Michael McLain	2. Paul Heng	3	4	5	6	7	8	9	10	11	12	13	14	15	16	17

Element D - Brainstorm and Design

- We defined two types of solutions
  - Prevention
  - Mitigation

- Built upon prior solutions to create ideas

TITLE

Tracker detailed / annotated

21

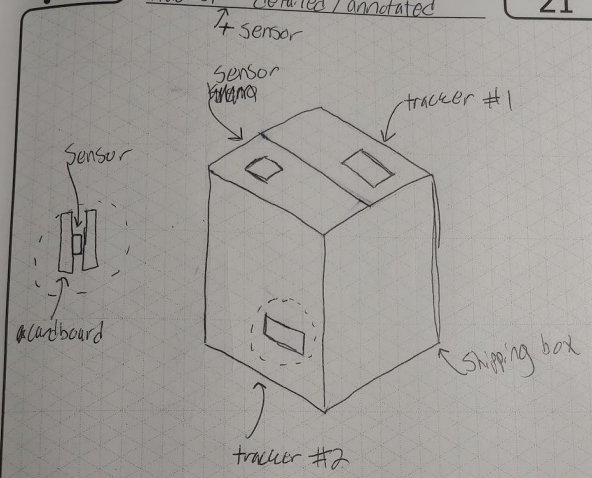

*Note:

- all trackers are inside the cardboard
- All sensors communicate with each other one trackers
- tracker senses acceleration and position relative to the other systems

DESIGNED BY: Carlos Pattiglia

DATE 3-11-2021

WITNESSED BY: Dmitry Pattiglia

DATE 3-11-21

PROPRIETARY INFORMATION

All information is the property of, and solely owned by the Designer.

TITLE

Door system annotated

23

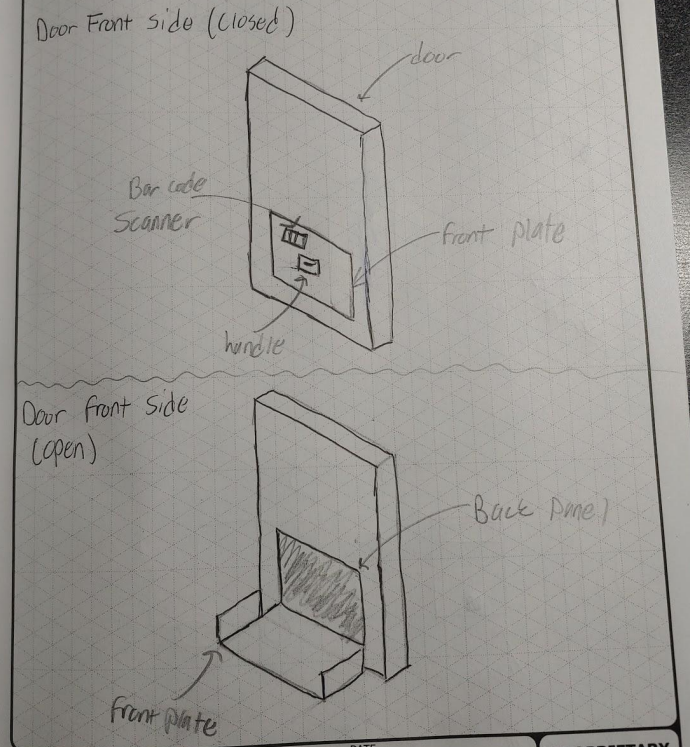

DESIGNED BY: Carlos Pattiglia

DATE 3-11-2021

WITNESSED BY: Dmitry Pattiglia

DATE 3-11-21

PROPRIETARY INFORMATION

All information is the property of, and solely owned by the Designer.

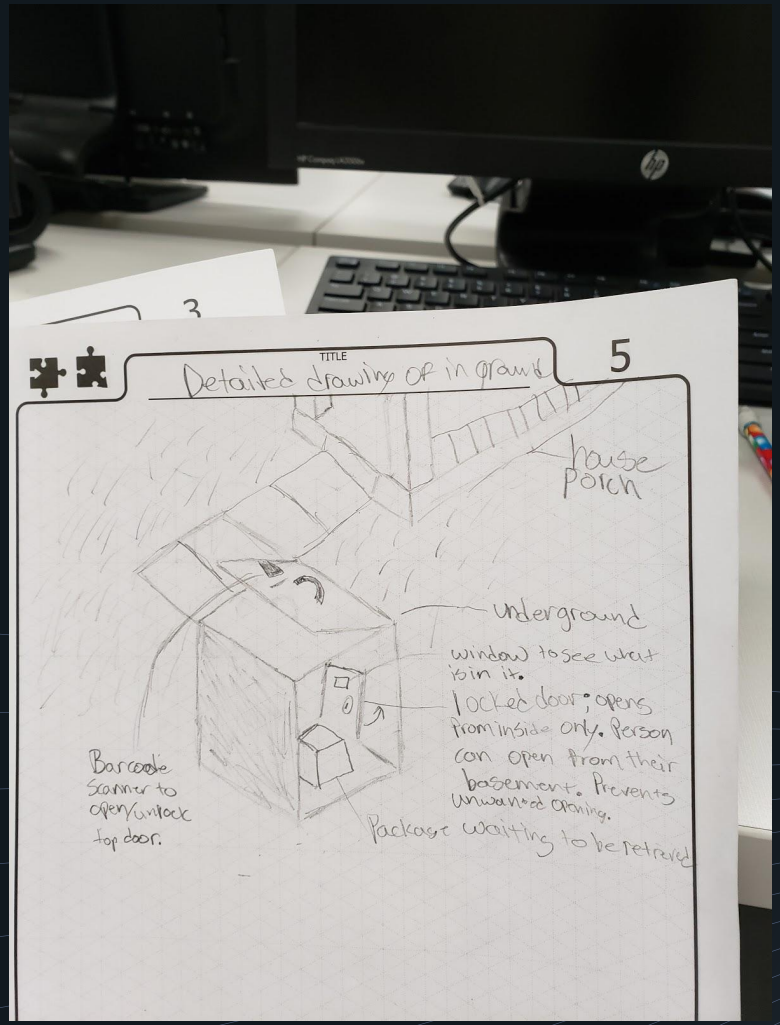
TITLE
Detailed drawing of in ground
5
house porch
underground
window to see what is in it.
locked door; opens from inside only. Person can open from their basement. Prevents unwanted opening.
Barcode scanner to open/unlock top door.
Package waiting to be retrieved

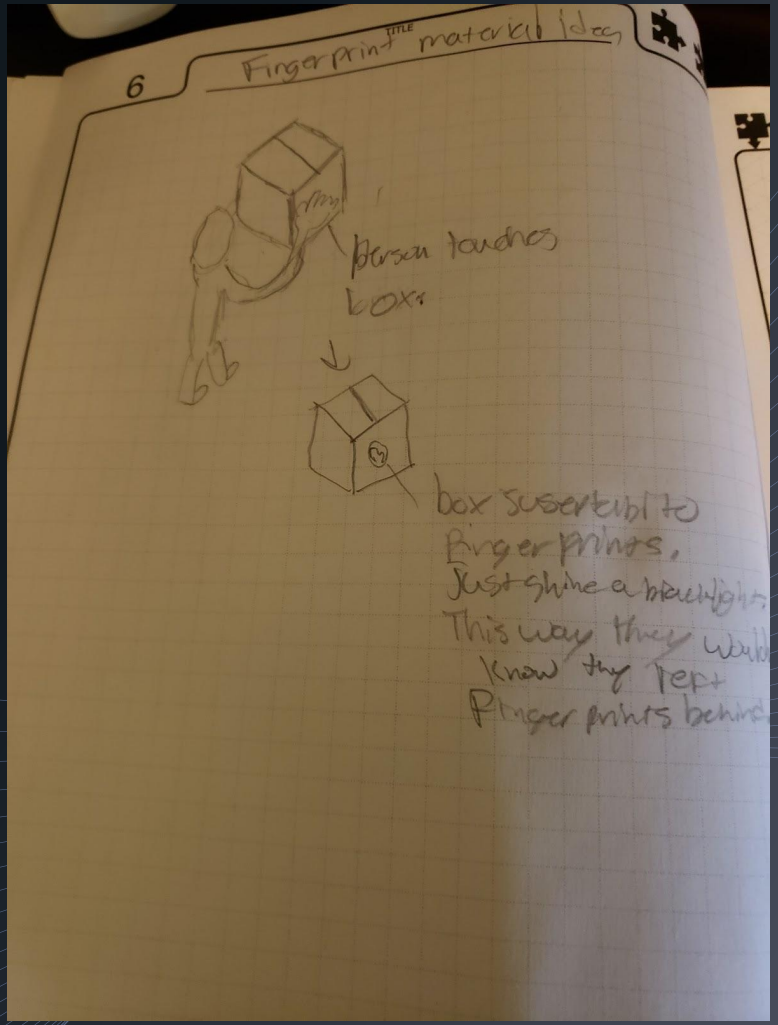
TITLE
6
Fingerprint material ideas
Person touches box.
box susertibl to fingerprints. Just shine a blacklight. This way they will know they left fingerprints behind

Element D - Specifications

- Consumer Specifications:
  - Security, Size, Aesthetics

- Business Specifications:
  - Manufacturing Complexity, Adaptability

- Both:
  - Ease of Use, Affordable/Costs

Scale 1-5	WEIGHT							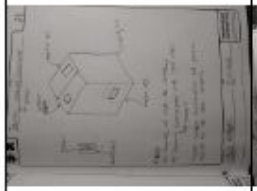		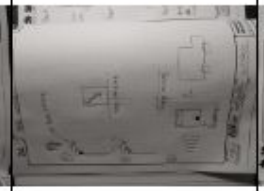		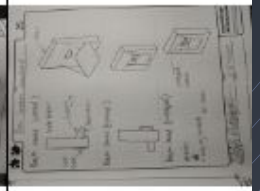	
Specifications		**Rating**	**Weighted Score**	**Rating**	**Weighted Score**	**Rating**	**Weighted Score**	**Rating**	**Weighted Score**	**Rating**	**Weighted Score**	**Rating**	**Weighted Score**
Security	5	5	25	1	5	3	15	3	15	2	10	4	20
Ease of Use	4	4	16	5	20	4	16	4	16	5	20	4	16
Affordable for businesses	2	1	2	3	6	3	6	2	4	4	8	5	10
Manufacturing complexity	3	2	6	3	9	3	9	3	9	3	9	3	9
Costs for Consumer	3	1	3	4	12	4	12	3	9	3	9	3	9
adaptability for business transition	2	3	6	4	8	3	6	3	6	4	8	4	8
Size	2	1	2	5	10	5	10	5	10	3	6	4	8
Aesthetics	1	3	3	4	4	4	4	5	5	3	3	3	3
Ulterior	1	2	2	1	1	2	2	3	3	4	4	3	3
TOTAL			65		75		80		77		77		86

Scoring Key: 1 being the lowest and 5 being the highest rank

Element D - Selected Design

- Mixture between Amazon Key and Delivery Box solutions
- Making modifications to cardboard is difficult (International Paper)
- Cost Effective and Security
- We wanted a more physical project

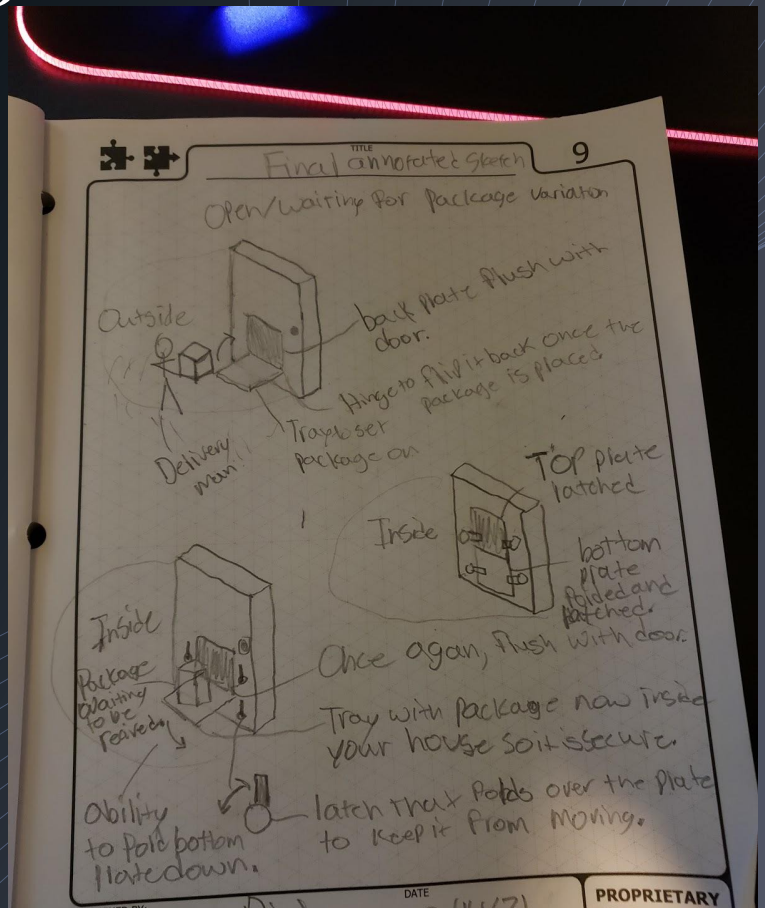

Element E - STEM Principals

- Science
  - Energy Distribution and Durability
  - Material Selection: Sturdy, Reliable (many uses), Weather-resistant, aesthetically pleasing

- Technology
  - Tools and knowledge needed to shape and form materials
  - Equipment to modify or fit the design into a home
  - How electronics work (motors, barcode scanner)

Element E - STEM Principals

- Engineering
  - Components working together properly (locks, barcode, installation)
  - Ensuring the efficiency/effort of the system
  - Making the final product appealing

- Mathematics
  - The size and ratio of the design (fit packages)
  - How much weight can be handled

Element E - Expert Input

- Officer McLain
  - Prefered the idea to mount the design to the garage
  - A deadbolt would be fantastic for locking
  - Thieves use opportunity to steal: increase the effort
  - Redundancy: alarms or cameras

- Paul Heng (electrical engineer)
  - A barcode scanner for opening/unlocking is definitely possible
  - Examples of these on apartment doors

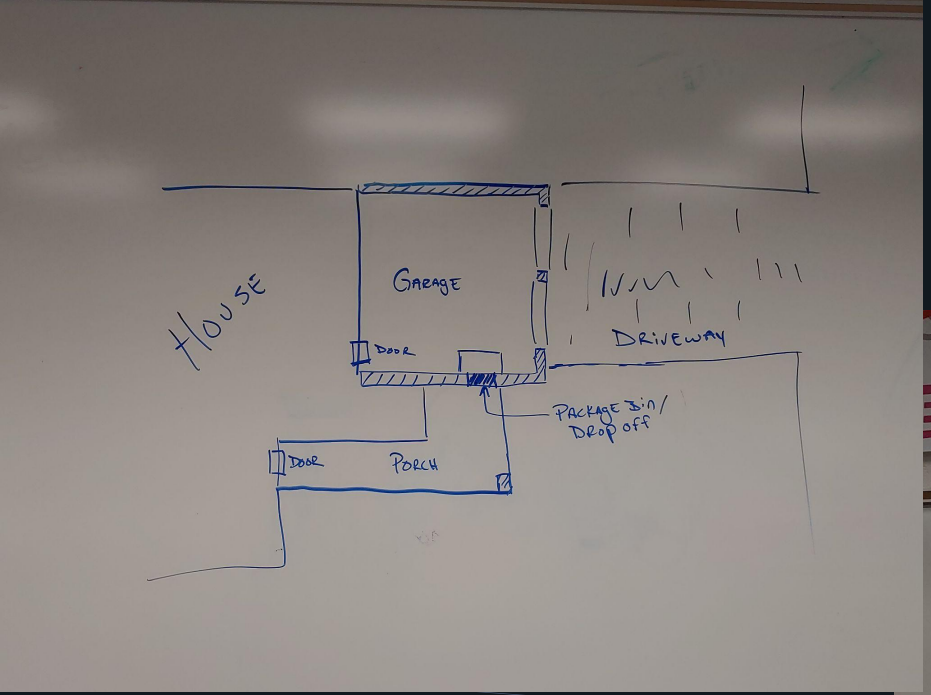
House
Garage
Door
Driveway
Package Bin/
Drop off
Door
Porch

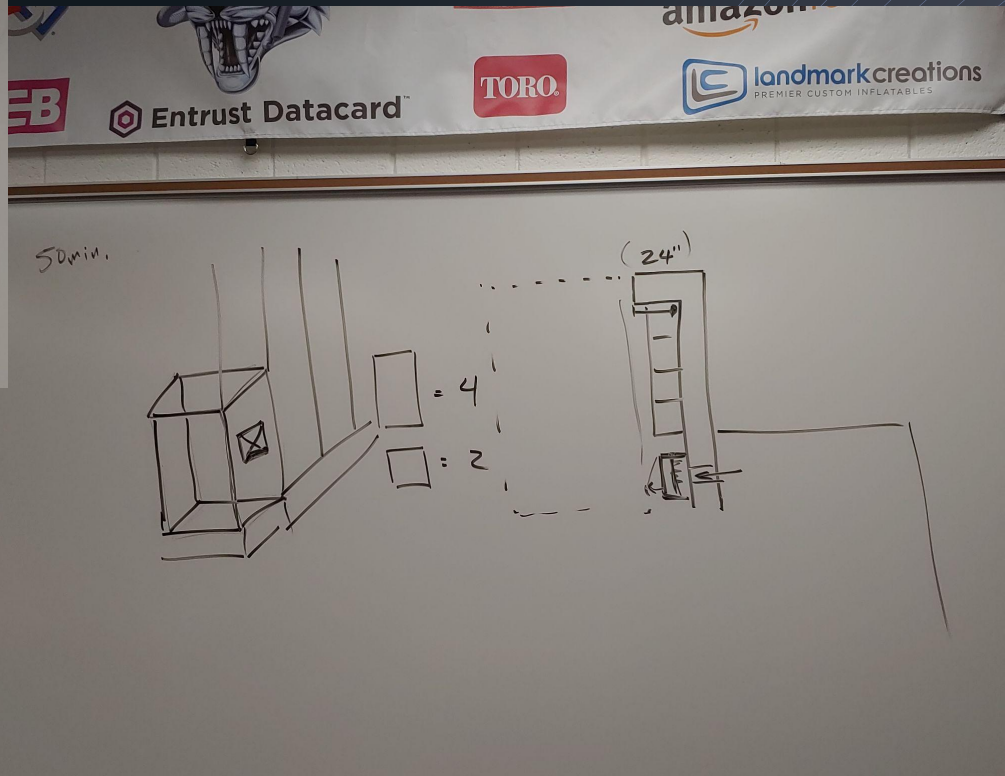
Entrust Datacard
TORO
landmarkcreations
PREMIER CUSTOM INFLATABLES
50min.
(24")
= 4
= 2

Element F - Market Analysis

Competitors:

- Amazon Key
- At-home delivery boxes

- Cost of Current Solutions:
  - Amazon Key:
    - Free for Prime users
    - Optional camera system: kits range from $200 to $300
  - At-home deliver boxes:
  - varies (multiple choices from many manufacturers available)
  - $50 to $300
- Our solution: modest, secure inbetween

How much would you be willing to pay to install this design into your house?

14 responses

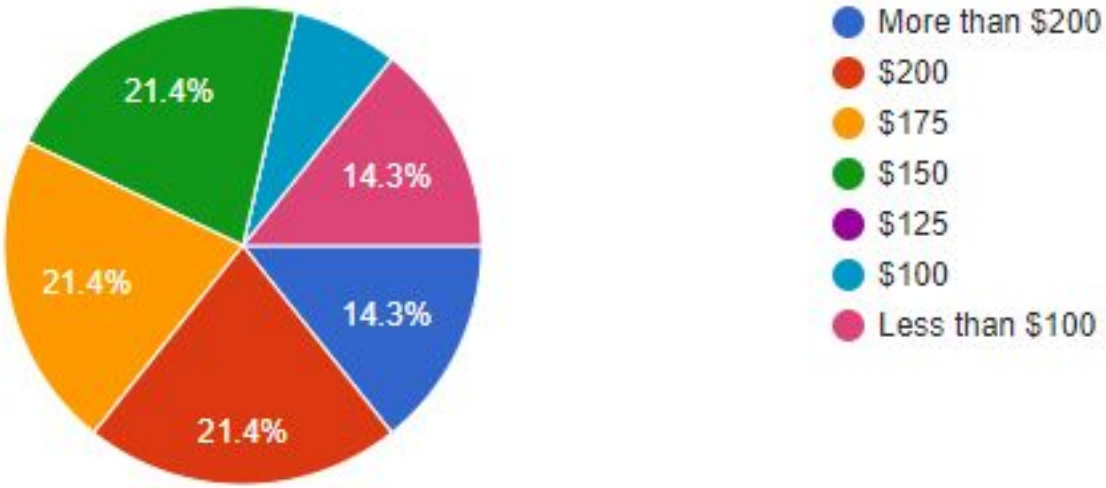

- Installation fees and equipment
- Labor
- Convenience

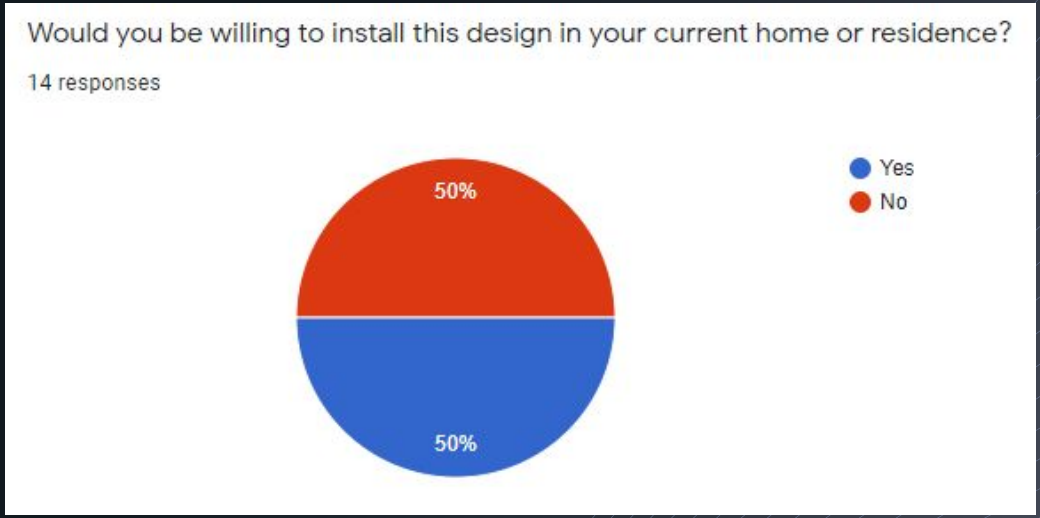

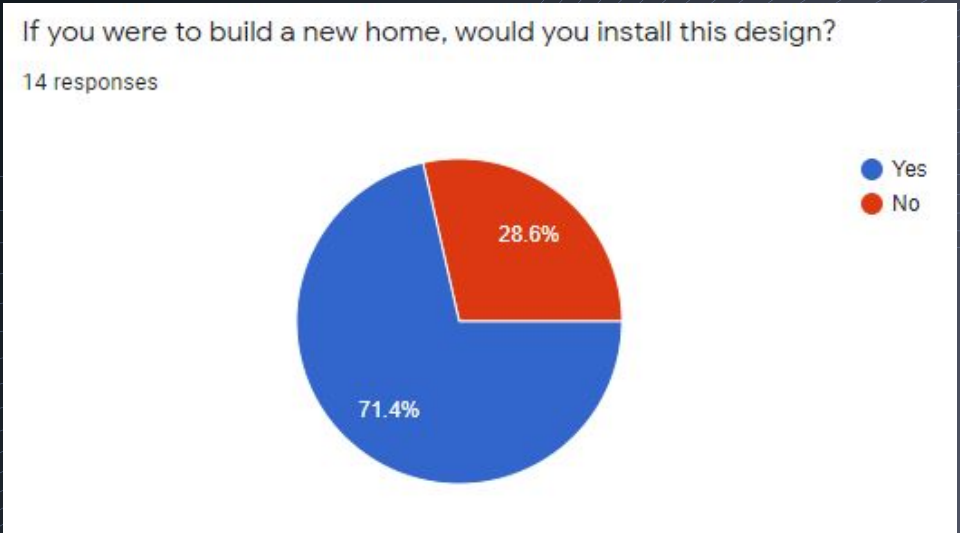

Element G - Construction of a Prototype

- Original Idea: put supportive metal rods and slide them into the front and back panels

Element G - Construction of a Prototype

Element G - Construction of a Prototype

Element G - Construction of a Prototype

Front

Back

Element G - Construction of a Prototype

Side

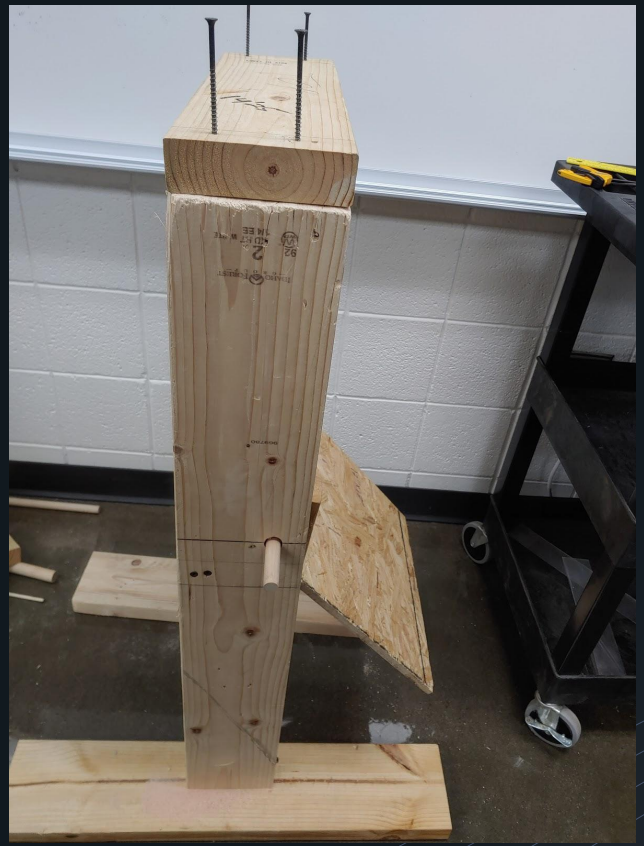

Modifications:

- Panels were trimmed
- Bottom Frame edit

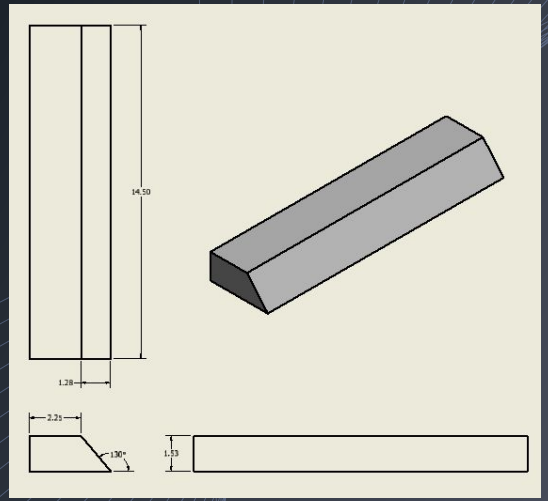

Element G - Construction of a Prototype

Element G - Construction of a Prototype

Element G - Construction of a Prototype

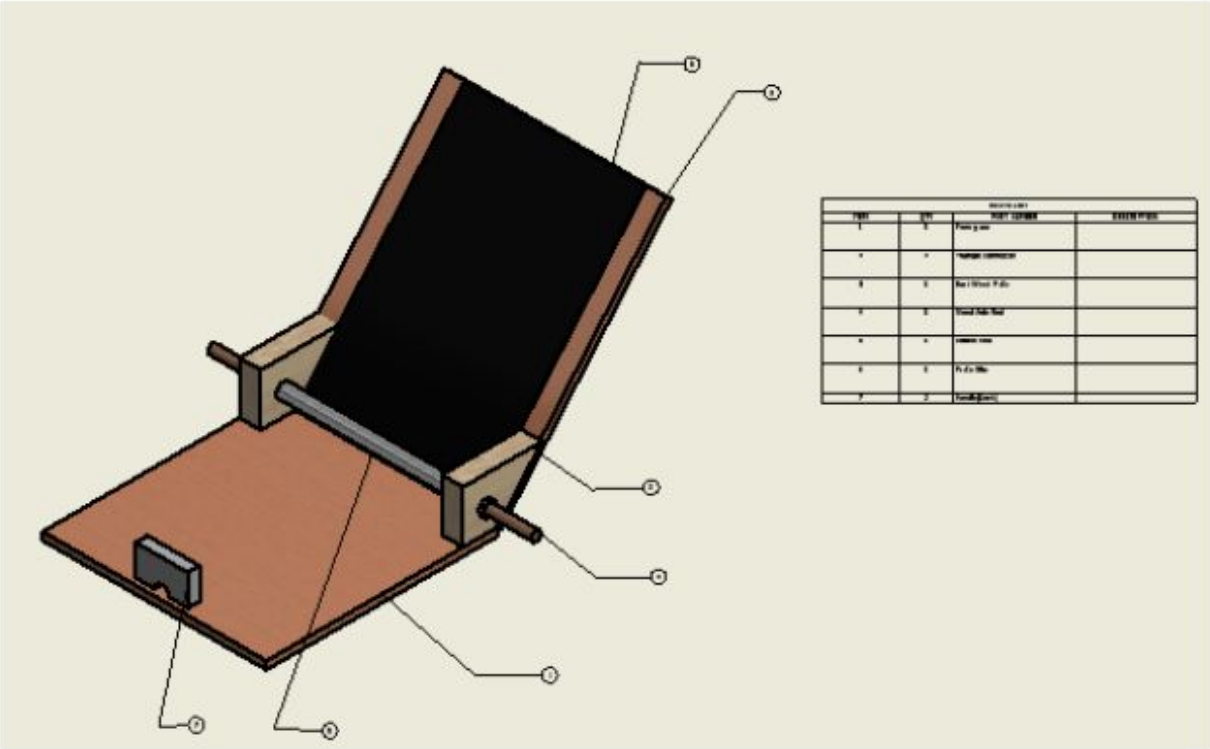

LATCH

Parts:

- Front Plate
- Triangular Connector
- Back Plate
- Wood Axle Rod
- Hollow Rod
- Plastic Sheet
- Handle/Lock (x2)

Element G - Construction of a Prototype

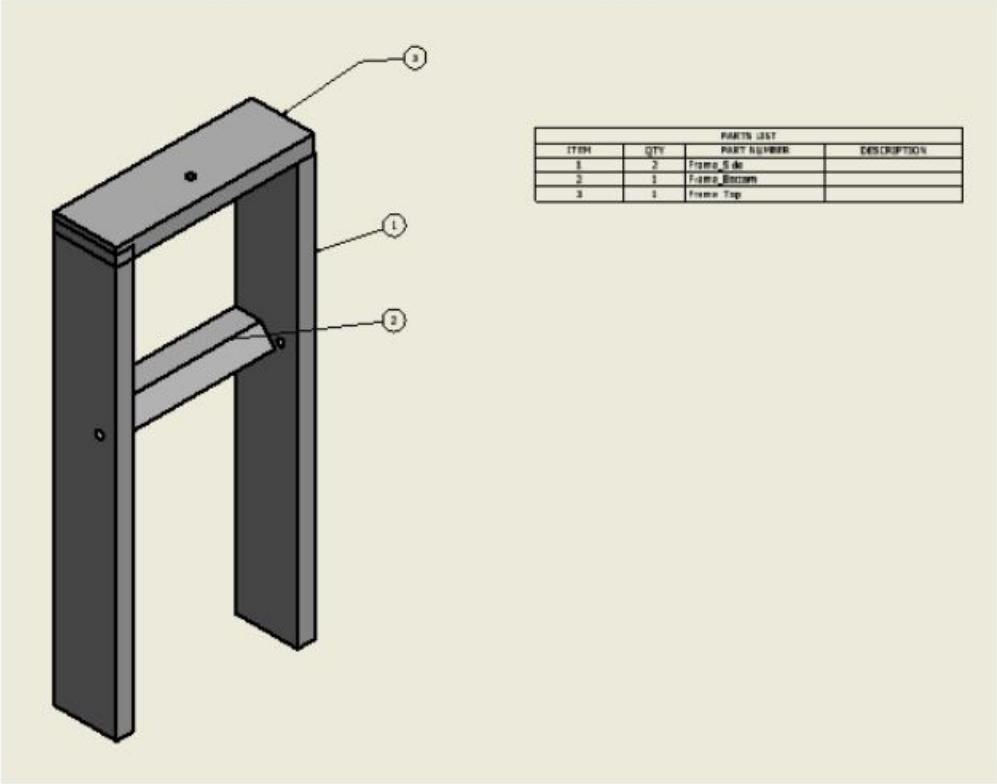

PARTS LIST			
ITEM	QTY	PART NUMBER	DESCRIPTION
1	2	Frame_Side	
2	1	Frame_Bottom	
3	1	Frame_Top	

FRAME

Parts:

- Frame Side
- Frame Top
- Frame Bottom
- Note: this is supposed to represent a garage frame/studs

Element G - Incremental Testing

Size Test: L x W x H

- Small: 7.50'' x 5.75'' x 4.00''
- Medium: 10.75'' x 7.75'' x 4.00''
- Large: 11.00'' x 8.50'' x 6''

Element G - Incremental Testing

Other Box:

16.00'' x 12.00'' x 5.25''

(not part of tests)

Element G - Incremental Testing

Weight Test:

- Light < 1 lb.
- Medium = 1 lb.
- Heavy = 2.2 lb.

Element G - Incremental Testing

Material/Friction Test:

Plastic > cardboard and wood > styrofoam

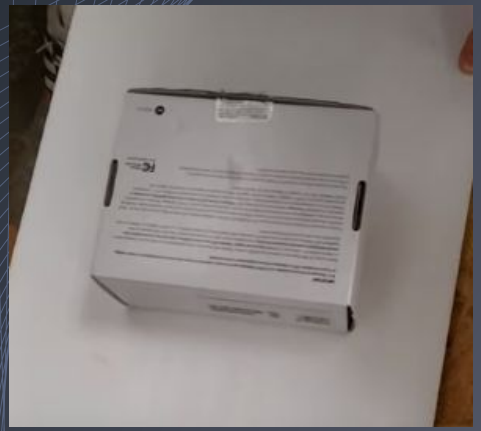

Element H - STEM Considerations

- Science
  - Energy distribution and durability through different materials
  - How much force a circular deadbolt can take
  - Optimize thicknesses/size for final product (panels, deadbolt)

- Technology
  - How electronics work (barcode scanner, arduino, microcontroller)
  - Programming Knowledge (phone app, alerts)

Element H - STEM Considerations

- Engineering
  - Manufacturing considerations (parts, required equipment and labor)
  - Optimize costs (materials, resources)
  - Visual Aesthetics
  - Safety

- Math
  - How the product is going to be installed into a garage frame
    - 2'' x 6'' studs, space between studs
  - Thickness of materials (forces: people, weather)
  - How all the components fit together
  - Size of the overall latch/hole

Element H - Inclined Plane Test

Testing Procedure:

- Place the package on the latch at the lowest angle
- Lift the latch to the independent angle
- Wait 5 seconds to see if the package slips
- Tested angles in degrees: 0 (back-plate flat), -10, -20, -30

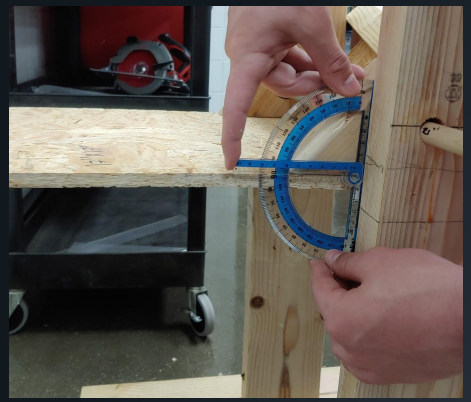

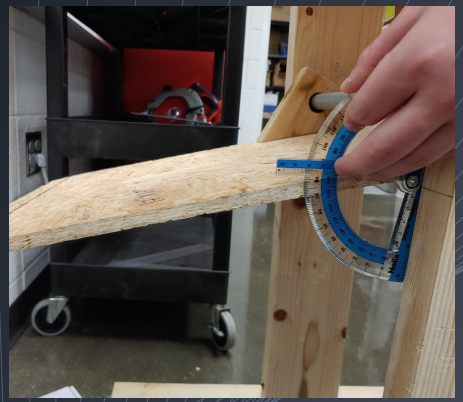

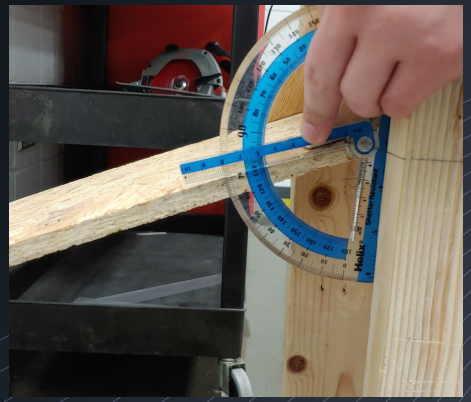

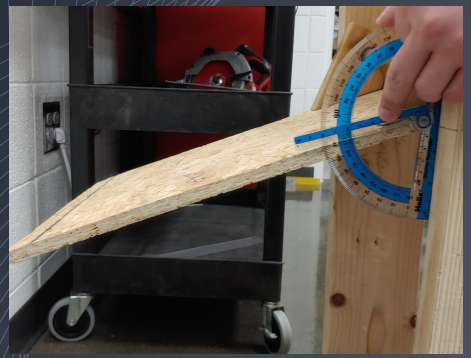

Element H - Reach Test

Testing Procedure:

- For each test, we placed the box 10.5'' from the studs of the wall
- We then measured each individual's height, arm length, shoulder length
- Each person then attempted to grab and retrieve the box in any way they could (unlimited time granted).

Element H - Tensile Force Test

Testing Procedure:

- 3 wooden dowels were gathered in different diameters (0.25'', 0.375'', 0.638'')
- The Labquest Mini & Vernier Structures and Materials Tester were set up
- Logger Pro software was prepared
- Firstly, the 0.25'' dowel was placed on the machine and then force was applied until it snapped.
- The 0.375'' and 0.638'' dowels were tested in the same manner

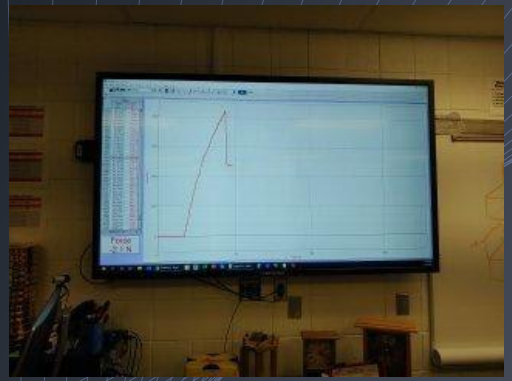

0.25'' dowel completely snapped

0.375'' dowel completely snapped

0.638'' dowel was fractured

Element I - Inclined Plane Analysis

Observations:

- Around -20° the box started to slide
- we concluded that it did not completely slide because of friction
- Note: the package/box was empty and small. It also did not contain any weight

Degrees	Did box slide off?
0	no
-10	no
-20	no
-30	yes

Element I - Inclined Plane Analysis

Analysis

- A larger degree is unnecessary.

- Materials for sliding
  - More Sleek
  - More costs and manufacturing
  - Durability concerns

- Longer back plate for fragile packages (future consideration)

Element I - Reach Analysis

Observations:

- Combination of Height, Arm Length, Shoulder Width
- Pattern of testers leaning on the frame or stepping past it
- Testers able to retrieve the box said it was uncomfortable

Person	Height	Arm Length	Shoulder Width	Able retrive box?
Owen Diede	6'	31"	19.25"	No
Cody Panthaphi	5' 11"	28"	18.25"	No
Riley Rosenow	5' 7"	29.5"	16"	No
Cody Fanum	5' 8"	28"	15"	No
Aaron Dumalag	5' 10"	29"	18.5"	No
Megan Steine	5' 5"	27.5"	16.5"	No
Osvaldo Mascar	5' 9"	29"	17.5"	No
Joseph Mulcahy	6' 1"	30"	16.5"	Yes
Blake Hokanson	5' 9"	30"	16"	Yes
Kaia Ruden	5' 5"	27"	16"	Yes

Element I - Reach Analysis

Analysis

- We are not too concerned with some people being able to fit
  - The latch will conceptually locked
  - Reduce the opportunity to steal
  - Location of boxes will not be 10.5'' away from the studs

- Materials for sliding
  - More Sleek
  - More costs and manufacturing
  - Durability concerns

- Longer back plate for fragile or heavier packages (future consideration)

- Paul Heng's feedback: somewhat bias group of testers

Element I - Tensile Force Analysis

Observations:

- Significant, exponential difference with sizes
- 0.638'' dowel is less than double the diameter of the 0.375 → withstand 4x the force
- 0.638'' dowel only fractured

Diameter	Max Force	Snap?
.375"	212.3 N	Yes
.25"	76.1 N	Yes
.638"	844.3 N	Fractured

Element I - Tensile Force Analysis

Analysis

- Exponential performance
  - A larger bolt will be more appropriate for security
  - Further testing to determine optimal size (costs/materials)
  - Paul Heng's feedback: testing the same type of rods multiple times

Summary

- meets the following criteria: security, size, manufacturing complexity, and ease of use.
- Viable in the market (manufacturing and installation)
- Future considerations:
  - Electronic deadbolt
  - Compatible phone app
  - Improvements to panels (materials, dimensions)
  - Reinforcement of exposed frame