USB CONNECTOR

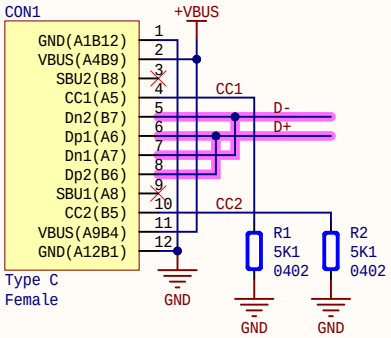

REGULATOR

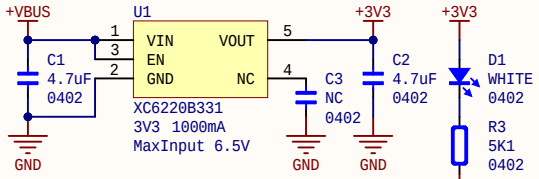

Datasheet

MICROCONTROLLER

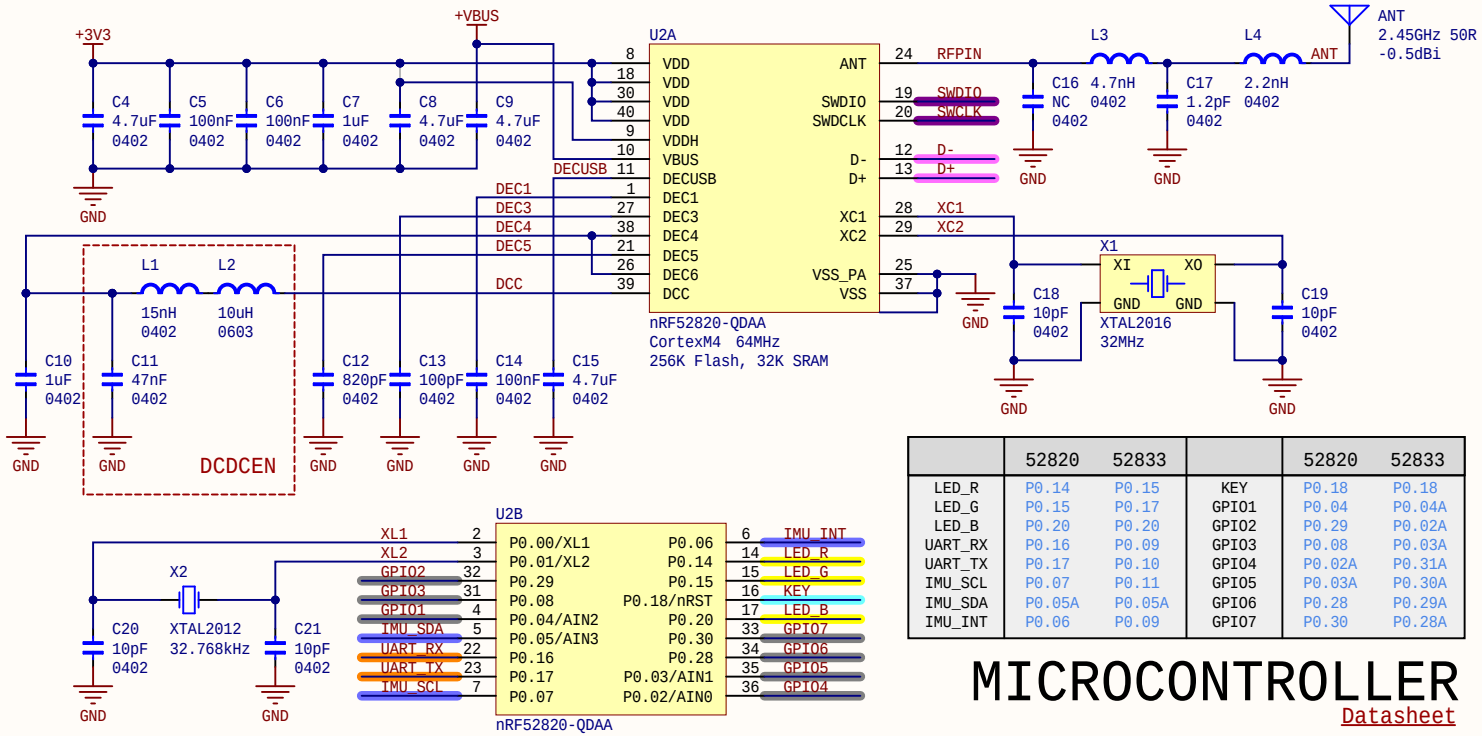

	52820	52833		52820	52833
LED_R	P0.14	P0.15	KEY	P0.18	P0.18
LED_G	P0.15	P0.17	GPIO1	P0.04	P0.04A
LED_B	P0.20	P0.20	GPIO2	P0.29	P0.02A
UART_RX	P0.16	P0.09	GPIO3	P0.08	P0.03A
UART_TX	P0.17	P0.10	GPIO4	P0.02A	P0.31A
IMU_SCL	P0.07	P0.11	GPIO5	P0.03A	P0.30A
IMU_SDA	P0.05A	P0.05A	GPIO6	P0.28	P0.29A
IMU_INT	P0.06	P0.09	GPIO7	P0.30	P0.28A

Datasheet

LED/Button

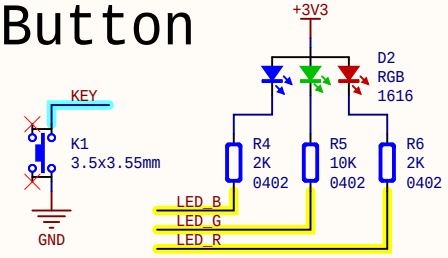

SENSOR

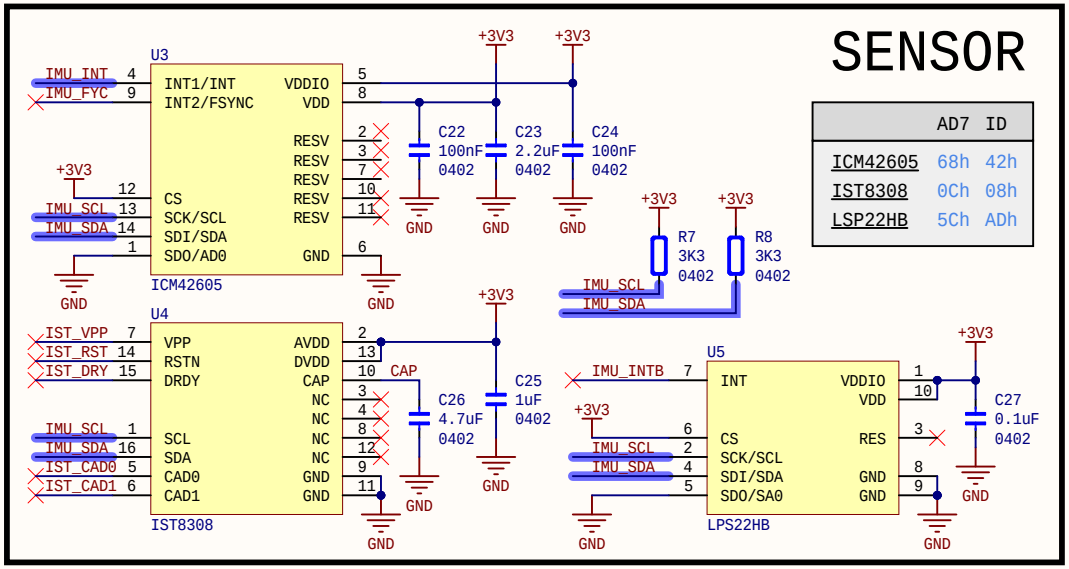

	AD7	ID
ICM42605	68h	42h
IST8308	0Ch	08h
LSP22HB	5Ch	ADh

EXPEND

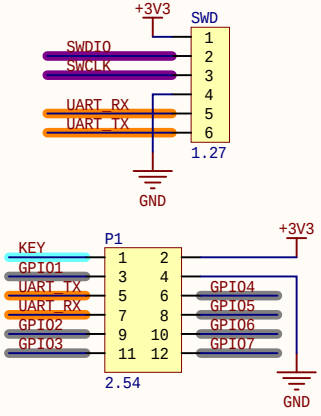

KitSprout
KSIMU V1