Engineering Applications of Artificial Intelligence 159 (2025) 111762

Contents lists available at ScienceDirect

Engineering Applications of Artificial Intelligence

journal homepage: www.elsevier.com/locate/engappai

Hybrid modelling and identification of mechanical systems using Physics-Enhanced Machine Learning

Mikel Merino-Olagüe [a,b,c,*], Xabier Iriarte [a,b], Carlos Castellano-Aldave [d], Aitor Plaza [a]

[a] Department of Engineering, Public University of Navarre, Arrosadía Campus, Pamplona, 31006, Navarre, Spain
[b] Institute of Smart Cities (ISC), Public University of Navarre, Arrosadía Campus, Pamplona, 31006, Navarre, Spain
[c] NAIR Center, C/Tajonar 20, Pamplona, 31006, Navarre, Spain
[d] Department of Electrical, Electronic and Communications Engineering, Public University of Navarre, Arrosadía Campus, Pamplona, 31006, Navarre, Spain

ARTICLE INFO

Keywords:
Mechanical system identification
Hybrid modelling
Physics-enhanced neural networks
Parameter estimation

ABSTRACT

Obtaining mathematical models for mechanical systems is a key subject in engineering. These models are essential for calculation, simulation and design tasks, and they are usually obtained from physical principles or by fitting a *black-box* parametric input–output model to experimental data. However, both methodologies have some limitations: physics based models may not take some phenomena into account and *black-box* models are complicated to interpretate. In this work, we develop a novel methodology based on *discrepancy modelling*, which combines physical principles with neural networks to model mechanical systems with partially unknown or unmodelled physics. Two different mechanical systems with partially unknown dynamics are successfully modelled and the values of their physical parameters are obtained. Furthermore, the obtained models enable numerical integration for future state prediction, linearization and the possibility of varying the values of the physical parameters. The results show how a hybrid methodology provides accurate and interpretable models for mechanical systems when some physical information is missing. In essence, the presented methodology is a tool to obtain better mathematical models, which could be used for analysis, simulation and design tasks.

1. Introduction

In all areas of engineering, modelling has become a fundamental tool for calculations, simulations and system design. The most common engineering models are based on basic principles of physics that relate the variables of interest. Newton's laws are used to model mechanical systems, Maxwell's laws are used for electro-magnetic systems and for any system that involves changes in temperature, pressure and volume together with energy transfer in the form of heat, the most common approach is to use the principles of thermodynamics. In the vast majority of cases models are made with the intention of predicting, with sufficient accuracy, the behaviour of the systems they represent. System identification attempts to build versatile models that can be adjusted to match their predictions with data obtained from experiments prepared for this purpose. When parametric models are built whose parameters are considered to be known, these models are called *white-box*. Conversely, when the parameters are not known *a priori* and are estimated from the data, the models are referred to as *grey-box*.

Mechanical systems can be modelled by means of physical laws using differential equations. These equations usually depend on a number of parameters with physical meaning (mass, inertia, friction, damping, stiffness etc.) which may be unknown and difficult to measure directly. Hence, the system identification problem becomes a parameter estimation problem where the values estimated for the parameters are the ones that make the model fit the data in the best possible way according to a certain criterion (Aster et al., 2005; Walter and Pronzato, 1997). The parameter estimation approach has been extensively used in mechanical engineering in fields such as robotics (Khalil and Dombre, 2002; Hollerbach et al., 2016; Farhat et al., 2008; Lee et al., 2024), aeronautics (Morelli and Klein, 2016; Jategaonkar, 2006), vehicles (Doumiati et al., 2012; Alberer et al., 2012) or wind turbines (Bao et al., 1996).

Especially in robotics, techniques for the identification of inverse models were developed enormously in the 1990s and 2000s. In this context, a multitude of developments were made in fundamental aspects of robotic system identification such as: the geometric calibration (Bernard and Albright, 1993; Khalil and Dombre, 2002), minimum kinematic parameterization with Denavit–Hartenberg parameters (Denavit and Hartenberg, 1955; Khalil and Kleinfinger, 1986), development of linear-in-parameters models (Atkeson et al., 1986; Maes et al., 1989), parameterization of trajectories (Swevers et al., 1996;

* Corresponding author at: Department of Engineering, Public University of Navarre, Arrosadía Campus, Pamplona, 31006, Navarre, Spain.
E-mail address: mikel.merino@unavarra.es (M. Merino-Olagüe).

https://doi.org/10.1016/j.engappai.2025.111762
Received 18 February 2025; Received in revised form 28 May 2025; Accepted 10 July 2025
Available online 22 July 2025
0952-1976/© 2025 The Authors. Published by Elsevier Ltd. This is an open access article under the CC BY license (http://creativecommons.org/licenses/by/4.0/).

Calafiore et al., 2001; Gautier and Khalil, 1992), development of optimal excitation criteria (Armstrong, 1989; Sun and Hollerbach, 2008; Gautier and Khalil, 1992; Presse and Gautier, 1993; Swevers et al., 1997), model reduction (Gautier, 1991; Sheu and Walker, 1991; Khalil and Bennis, 1995; Ros et al., 2012), development of friction models (Olsson et al., 1998; Armstrong-Hélouvry, 1991) and maximum likelihood estimation of parameters (Abdellatif et al., 2005; Olsen and Petersen, 2001; Swevers et al., 1997). In this context, most of the models are built based on physics, as the rigid body dynamics and electric motor dynamics are based on first principles and are known to properly describe the actual system dynamics. Moreover, *inverse dynamic models* are extensively used as model-based-control algorithms. For example, the Computed Torque Control (Bekey, 2008) algorithm uses inverse dynamic models to estimate the torque to be applied in the actuators of a mechanical system to reach a prescribed movement. Sometimes, the mere modification of the parameters does not provide enough flexibility to adjust the model predictions to the experimental data. This can happen, for example, because there are no solid physical principles with which to represent the system, because the equations proposed do not adequately represent the physics of the system, or because there are unknown or difficult-to-model effects that have not been considered in the model. For example, the mechanics of a ball falling pulled by gravity are very easy to model, but the interaction of the ball with air is much more involved and depends on many more physical quantities (mass and radius of the ball, air density, relative velocity, . . .). In these cases it is possible to resort to *black-box* models where the equations describing the system do not respond to physical principles but have a sufficiently general structure to represent the input–output relationships observed in the experimentation. The Auto-Regressive Moving Average with eXogenous inputs (ARMAX) and the Neural Networks (NN) are two examples of such models. The advantages of these models are that they can be general enough to represent any input–output relationship and require very little *a priori* knowledge of the system under study. However, these models have very low interpretability and in general cannot be used to generalize the use of the model outside the domains in which the experiments used to fit them have been performed.

Recently, with the rise of Artificial Intelligence (AI) and more specifically the field of Machine Learning (ML) new system identification and modelling techniques have emerged (Tutunji, 2016; Rajendra and Brahmajirao, 2020). These are examples of the *black-box* system identification techniques presented before, in the sense that they relate an input to an output with a mathematical model that depends on a set of optimally tuned non-physical parameters. Usually, AI based system identification techniques suffer a lack of interpretability and in some cases physical inconsistency.

Therefore, it becomes evident that the *grey-box* and *black-box* modelling-identification techniques have complementary characteristics. On the one hand, the *grey-box* models are very intimately related to first principles, are interpretable, consistent and parsimonious, and they can be used in contexts very different from the one that motivated them. However, they may not be general enough to account for complex phenomena, oversimplifying the systems behaviour and neglecting some relevant physical interactions. On the other hand, the *black-box* models do not need to relay on first principles and can be as general as needed. However, these models are usually not interpretable, and cannot be used in a different context than the one in which they have been identified. Moreover, care has to be taken not to overfit the model, as the number of parameters used for the model can be excessive.

In order to take advantage of the best features of both types of models, researchers are adding physical insight to the ML algorithms developing a set of techniques known as *Physics Enhanced Machine Learning* (PEML). Reviews (Cuomo et al., 2022; Lawal et al., 2022) cover many of the currently developed techniques for general applications, while Faroughi et al. (2024) is focused in solid and fluid mechanics, Ayankoso and Olejnik (2023) in mechatronics and Zaparoli Cunha et al. (2023) in structural dynamics and vibroacoustics. Haywood-Alexander et al. (2024) have recently proposed a classification of the currently available PEML methods as a spectrum, being the model lighter or darker depending on the required/available data quantity and the physics reliance. The *white-box* models rely heavily in physical principles requiring less data, while *black-box* models require heavy quantities of data since their physical reliance is really low.

Starting at the darker end of the spectrum we have the models classified *Physics-encoded neural networks*. The Hamiltonian Neural Networks (Greydanus et al., 2019) and Lagrangian Neural Networks (Cranmer et al., 2020) belong to this class of models. They use a NN that takes several inputs and returns a single output that will represent, respectively, the Hamiltonian or the Lagrangian of the system being modelled. In a second step, thanks to the *automatic differentiation* tools that currently exist in packages such as JAX (Bradbury et al., 2018) and Pytorch (Paszke et al., 2017), the partial derivatives of the output with respect to the inputs are computed to construct the Hamiltonian or Lagrangian equations. Finally, the NN is trained by minimizing the error in the completion of these equations. These models provide great versatility thanks to the universal approximator characteristics (Hornik et al., 1989) of the NNs, and also promote the obtention of models that comply with basic principles of mechanics such as the conservation of energy and momentum. Since these models belong to the dark grey part of the spectrum, they lack interpretability. Other models in this part of the spectrum are the Residual Neural Networks (ResNet) (He et al., 2016) and the Neural ODEs (Chen et al., 2019), which use a NN to model the function that makes the model take a step forward in time. The ResNets update their parameters directly comparing the experimental state at time $k+1$ with the estimation of the model based on the state at time k. In contrast, the Neural ODEs try to update the parameters of the NN so that if the differential equation is integrated over time, the complete solution is as close as possible to the experimental data. The Neural ODEs architecture is very interesting because it enables to use the identified model to directly perform direct dynamic simulations as the solution of an Initial Value Problem. Moreover, it is possible to add additional structure into the Neural ODEs combining them with Hamiltonian Neural Networks (Greydanus et al., 2019) to make the integrators be symplectic. However, the identified models cannot be used to perform inverse dynamics and are not interpretable.

Another way to impose more physical constraints on the *black-box* models would be through the so-called *Physics-Informed Neural Networks* (PINNs) (Raissi et al., 2019). Using this type of models, the differential equation of the dynamic system is represented by a NN. Such NNs are constrained to respect any symmetries, invariances, or conservation principles originating from the physical laws that govern the observed data. To actually incorporate physical information into the model, using automatic differentiation tools, the partial derivatives of the NN output with respect to the state variables are calculated. If there are conditions to be fulfilled by these partial derivatives, these conditions are promoted by introducing them in the cost function. For example, applying them for fluid mechanics (Peng et al., 2024), the divergence of the velocity field must be zero for incompressible flows. The PINNs can be used in solid mechanics to estimate the physical parameters or solve the Partial Differential Equations (PDE) as in Haghighat et al. (2021) for an elastic plane-strain problem.

In the rigid body mechanics context, in Yang et al. (2023) a dynamic model is proposed for the quasi-static contact phase of physical Human–Robot Interaction, which considers the complete structural dynamics of the collaborative robot. In this work a hybrid PINN is proposed, which utilizes a Recurrent Neural Network (RNN) and the Runge–Kutta numerical integration method to identify the joint dynamic parameters.

So far we have seen some models that combine physical information and universal approximators (such as NNs) for modelling. These models are on the darker end of the spectrum and tend to be poorly interpretable. In mechanical systems, however, it is very common to

have much more information and knowledge about the systems being modelled, so it is of interest to have other architectures in which more information can be incorporated into the models.

An architecture that remains at the lighter end of the spectrum is known as *discrepancy modelling*, in which models based on physical principles are built by incorporating an additional term intended to model discrepancies between *white-box* model predictions and experimental data. These discrepancies may be due to small physical effects whose existence is unknown, or to large physical effects that are known but difficult to model. These models can be considered as hybrid models, since they combine parts of the model that are considered *white-box*, with other parts that are modelled as *black-box*. Thus, these models require a great deal of knowledge about the physics of the system but accept that certain physical components or effects may be unknown or unavailable. For example, Kaheman et al. (2019) uses physical laws together with the data-driven technique Sparse Identification of Nonlinear Dynamics (SINDy) (Brunton et al., 2016) to model the Van der Pol oscillator and a real double pendulum on a cart system. Ebers et al. (2023) propose modelling the discrepancy with SINDy and 3 additional algorithms: Dynamic Mode Decomposition (DMD), Gaussian Process Regression (GPR) and NNs. They also present two different approaches to the methodology which are learning a model of the deterministic dynamical error or the systematic-space residual. These variations are applied to different systems which can be modelled with ODEs such as the Van der Pol oscillator, the Lorenz attractor and a spring–mass–damper system. Moreover, they are also applied to the canonical Burger's system of PDEs. Consequently, they show the enormous possibilities and approaches of discrepancy modelling.

In the field of mechanical engineering some applications of discrepancy modelling can be found. Wohlleben et al. (2022) tested 19 different ML techniques to model the discrepancies between their physical double-pendulum model and real data. For their particular case GPR and bagged-trees obtained the best results. In De Groote et al. (2022) authors go one step further in their use of discrepancy modelling in a slider-crank mechanism. Not only do they model a non-linear spring and uncertain damping, but also identify the parameters of the physical model (mass, inertia etc.) simultaneously. Additionally, they embed the hybrid model in a RNN to enable future state prediction. Askari et al. (2024) use the same approach on vehicles, identifying physically meaningful parameters and an unknown tire model with a discrepancy model embedded in a RNN.

In this work we present a hybrid modelling technique based on discrepancy modelling with an approach similar to that of De Groote et al. (2022) and Askari et al. (2024). Newton's second law is combined with a NN to model a non-linear spring of a Duffing Oscillator and the unmodelled magnetic interaction between the blades of the energy harvesting device developed by Castellano-Aldave et al. (2023). Instead of using a RNN for time-stepping, a static model similar to Neural ODEs is developed, since this approach provides better results according to Chen et al. (2019). The developed methodology has the ability to add additional physical knowledge to the model and to identify both the values of the physically meaningful and the NN parameters, simultaneously. Furthermore, once the model is identified, the physical parameters can be modified by the user. Then, the model can be rearranged, isolating the accelerations of the coordinates, and the model can be integrated in time. Moreover, the identified model can be linearized, together with the rest of the model, in order to perform modal analysis. Hence, the identified model can be used as a tool for the analysis and design of mechanical systems. Even this work is focused on mechanical systems, the methodology can be applied to any physical system with a partial knowledge of its dynamic equations. For example, it could be applied to electrical and electronic devices, fluid–structure interaction or heat transfer.

This paper is organized as follows: In Section 2 the classical system identification and the NN system identification techniques are reviewed. Then, the proposed hybrid modelling methodology is theoretically developed. Section 3 describes the use of the newly developed methodology in a numerical experiment which is a mass–spring–damper system with a non-linear approach *i.e.* a Duffing Oscillator. The development of the model is described, results are presented and further applications of the model are discussed. Section 4 goes one step further by presenting the use of the methodology in a real-world system, specifically in an energy harvesting device. The development of the model is described step by step, different results are shown and further applications of the model are discussed. Finally, the conclusions are presented in Section 5

2. Methodology

The proposed system identification methodology is a combination between classical *grey-box* parameter estimation and modern *black-box* ML approach. The combination of both results in a hybrid methodology suitable for a variety of problems.

2.1. Classical or grey-box system identification

The dynamics of a generic mechanical system are described using second order differential equations. These equations may be written as

$$\mathbf{d}\left(\mathbf{q}, \dot{\mathbf{q}}, \ddot{\mathbf{q}}, \mathbf{y}, \boldsymbol{\phi}\right) = \mathbf{0} \tag{1}$$

where $\mathbf{q}$ are the generalized coordinates, $\dot{\mathbf{q}}$ the generalized velocities, $\ddot{\mathbf{q}}$ the generalized accelerations, $\mathbf{y}$ the external forces and $\boldsymbol{\phi}$ the parameters. In classical or *grey-box* parameter estimation, the goal is obtaining the values of $\boldsymbol{\phi}$ which best describe the system. For the mechanical systems, it is possible to write the dynamic equations as a linear function of the inertial parameters. If the models of other relevant dynamic components as springs, dampings and friction effects are also written linearly with respect to their respective parameters, the dynamic equations can be written as:

$$\mathbf{K}\left(\mathbf{q}, \dot{\mathbf{q}}, \ddot{\mathbf{q}}\right)\boldsymbol{\phi} = \mathbf{y}. \tag{2}$$

Note that in this case, the equations are linear in the parameters $\boldsymbol{\phi}$, which is the usual case. To solve this equation for $\boldsymbol{\phi}$, the terms $\mathbf{K}$ and $\mathbf{y}$ of Eq. (2) are evaluated throughout several time instants and a system of equations

$$\mathbf{W}\left(\mathbf{q}, \dot{\mathbf{q}}, \ddot{\mathbf{q}}\right)\boldsymbol{\phi} = \begin{bmatrix} \mathbf{K}\left(\mathbf{q}_1, \dot{\mathbf{q}}_1, \ddot{\mathbf{q}}_1\right) \\ \mathbf{K}\left(\mathbf{q}_2, \dot{\mathbf{q}}_2, \ddot{\mathbf{q}}_2\right) \\ \cdots \\ \mathbf{K}\left(\mathbf{q}_n, \dot{\mathbf{q}}_n, \ddot{\mathbf{q}}_n\right) \end{bmatrix} \boldsymbol{\phi} = \begin{bmatrix} \mathbf{y}_1 \\ \mathbf{y}_2 \\ \cdots \\ \mathbf{y}_n \end{bmatrix} = \mathbf{Y} \tag{3}$$

is created. In its most simple form, this is the approach most frequently used for the industrial robotic model identification (Hollerbach et al., 2016). Note that this system of equations is overdetermined and an optimization problem must be solved in order to determine $\boldsymbol{\phi}$. A common approach of solving the problem is using least-squares and the Moore–Penrose pseudoinverse, obtaining the closed-form solution

$$\hat{\boldsymbol{\phi}} = \arg\min_{\boldsymbol{\phi}} \|\mathbf{Y} - \mathbf{W}\boldsymbol{\phi}\| = \left(\mathbf{W}^\top\mathbf{W}\right)^{-1}\mathbf{W}^\top\mathbf{Y}. \tag{4}$$

If the equations are not linear in the parameters, for example due to non-linear friction, it is not possible to write them as in Eq. (2) and the general form

$$\mathbf{K}\left(\mathbf{q}, \dot{\mathbf{q}}, \ddot{\mathbf{q}}, \boldsymbol{\phi}\right) = \mathbf{y} \tag{5}$$

is used. A closed-form solution does not exist anymore and non-linear optimization techniques must be used to obtain the estimated value of the parameters.

This approach provides highly interpretable and physically consistent models which can be easily build. Moreover, the optimization techniques for parameter tuning are highly documented and tested in

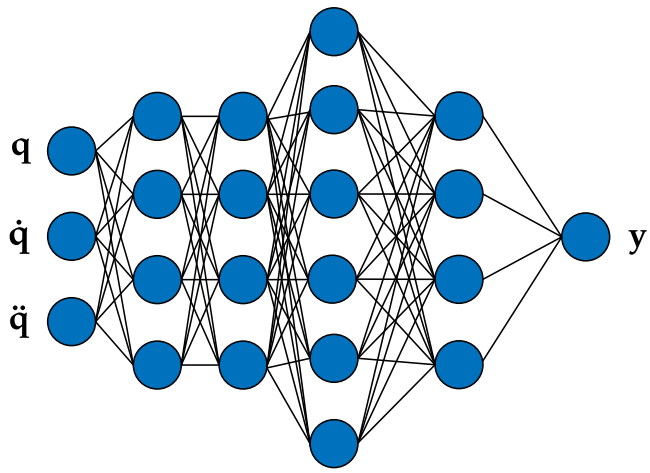

Fig. 1. Feed-Forward NN *black-box* modelling scheme.

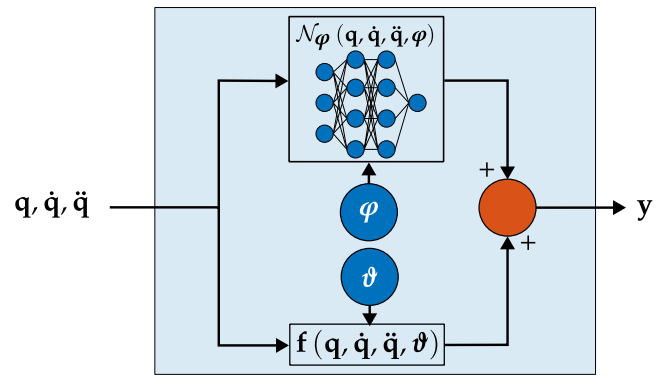

Fig. 2. Generic identification of the hybrid model.

the bibliography. The major disadvantage of *grey-box* modelling is that the models based on physical laws might not be accurate enough or that some phenomena is unknown or it cannot be modelled with general principles. Hence, in some cases other approaches are preferred to fit the model to the data.

2.2. Black-box feed-forward neural network identification

NNs are universal function approximators which relate inputs and outputs by adjusting a set of parameters composed of weights and biases. Their universality makes them suitable to obtain a mathematical model when the dynamics of a mechanical system are completely unknown. They can be directly used to model the input–output relationship of a system as shown in Fig. 1.

The inputs of the NN can be the generalized positions, velocities and accelerations of a mechanical system and the outputs can be the generalized external forces. Thus, the NN is used to model this relationship by adjusting its parameters (weights and biases) optimizing a loss function. Note that, the figure shows an arbitrary architecture: the number of output and inputs will depend on the system and the hyper-parameters such as number of layers, neurons per layer and activation function can be adapted to the problem.

This approach provides greater flexibility than the *grey-box* approach of Section 2.1. Thus, the same NN architecture can model multiple input–output relations without requiring any prior information about the systems. Conversely, the lack of interpretability is the biggest disadvantage of NNs, as it is a *black-box* with no physical meaning. Furthermore, as NNs are not derived from first principles, they can break physical laws, as the conservation of energy or momentum. Finally, the NNs require a huge amount of data and they can easily overfit to the data, creating models that do not generalize to other cases.

2.3. Hybrid modelling and identification approach

The two approaches explained in the previous sections have their advantages and disadvantages. In this section we will present the proposed hybrid method, starting from the *grey-box* model and adding one or some terms that take into consideration the unknown or unmodelled physics of the system.

A generic inverse dynamical model of a mechanical system can be written as in Eq. (5). The generally nonlinear function $\mathbf{K}$ can be partitioned in two functions so that

$$\mathbf{K}(\mathbf{q}, \dot{\mathbf{q}}, \ddot{\mathbf{q}}) = \mathbf{f}(\mathbf{q}, \dot{\mathbf{q}}, \ddot{\mathbf{q}}, \boldsymbol{\vartheta}) + \mathbf{g}(\mathbf{q}, \dot{\mathbf{q}}, \ddot{\mathbf{q}}) = \mathbf{y}. \tag{6}$$

In this partition, the structure (mathematical representation) of the nonlinear function $\mathbf{f}$ is supposed to be known, but it depends on the parameters $\boldsymbol{\vartheta}$ whose values are unknown. This function represents the known physics of a mechanical system. Conversely, $\mathbf{g}$ is an unknown function which represents the unknown physics of the mechanical system. This architecture is particularly interesting when unknown physical phenomena appear, such as: unknown friction effects, play between kinematic joints, unknown electric, magnetic or aerodynamic effects. These phenomena could be modelled with $\mathbf{g}$. A model with $\mathbf{f}$ and $\mathbf{g}$ will fit the data much better than a model with only $\mathbf{f}$ or $\mathbf{g}$.

This partial knowledge of the equations can be used in conjunction with a feed-forward NN to not only identify the unknown physics of the system but also the values of the physical parameters which characterize the part of the physics whose structure is known. Fig. 2 shows the general scheme of the proposed hybrid identification approach. Note that the unknown function $\mathbf{g}(\mathbf{q}, \dot{\mathbf{q}}, \ddot{\mathbf{q}})$ has been replaced by a feed-forward network $\mathcal{N}_{\varphi}$ with a set of unknown parameters $\boldsymbol{\varphi}$ which represent the non-physical parameters (weights and biases) of the network.

Additional constraints based on physics may be added to the hybrid model (HM) in order to constrain the space of possible solutions and improve the generalization capability of the model. For example, if it is known that the phenomena represented by function $\mathbf{g}$ only depends on $\mathbf{q}$, the NN could have only $\mathbf{q}$ as its input, limiting the space of possible functions and adding more physical insight to the model. Other phenomena such as symmetries, energy conservation or motion constraints could as well be added.

Once the HM and the constraints are designed, a loss function is defined

$$\mathcal{L} = \lambda_1 \|\mathbf{y} - \hat{\mathbf{y}}\| + \lambda_2 \mathbf{h} \tag{7}$$

where $\hat{\mathbf{y}}$ are the estimated outputs provided by the model, $\mathbf{h}$ are optional additional terms which may be added to the loss function and λ_1 and λ_2 are weighting values. The model is trained by tuning simultaneously the feed-forward NN parameters $\boldsymbol{\varphi}$ and the physical parameters $\boldsymbol{\vartheta}$. Note that any of the usual optimization techniques used in ML may be used. Once the training is finished, cross-validation techniques are used to ensure the generalization and viability of the model.

2.4. Implementation

The proposed methodology is implemented using the popular Python AI library PyTorch (Paszke et al., 2019). Thanks to the automatic differentiation capability of the library (Paszke et al., 2017), the HM is easily implemented and the gradients required to apply the optimization techniques are automatically calculated. Hence, only the parameters to be optimized and the forward function of the model need to be manually defined.

From the programming side, two main classes are defined: 1. The "Neural Network" class where the feed-forward neural architecture of the HM is defined and the non-physical parameters are initialized. 2. The HM class where the physical parameters are initialized as trainable parameters and the forward pass of the full model is defined. Note that this full model uses the feed-forward NN defined before, combined with the physical equations to mathematically define the schematic model of Fig. 2. It is important to emphasize that, during the optimization process, the software automatically calculates the gradients with respect to both the physical and non-physical parameters and then optimizes the values of the parameters.

The programming simplicity and architecture are of major advantage, since the model can be easily modified without requiring manual gradient calculations. The identified model can even be rearranged, isolating the accelerations instead of the external forcing terms, to solve and initial value problem by numerical integration.

3. Numerical experiment: Mass-spring-damper system with a non-linear spring

In order to test the validity of the proposed methodology, the first step was to identify a simple mechanical system. In this case, data obtained from numerical experiments on a mass–spring–damper system have been used. Specifically, the system is the well-known *Duffing oscillator* which adds a cubic term to the spring of a classic mass–spring–damper system.

3.1. System description

The system can be described by the differential equation

$$m\ddot{x} + c\dot{x} + kx + dx^3 = \tau \tag{8}$$

where m is the mass, c the damping coefficient, k the linear spring coefficient, d the non-linear spring coefficient and τ the external forcing. The model is considered to be partially known, being

$$\mathbf{f}\left(\mathbf{q}, \dot{\mathbf{q}}, \ddot{\mathbf{q}}, \boldsymbol{\vartheta}\right) = m\ddot{x} + c\dot{x} \tag{9}$$

the function describing the known physics. The function depends on the physical parameters

$$\boldsymbol{\vartheta} = \begin{Bmatrix} m \\ c \end{Bmatrix} \tag{10}$$

whose optimal values will be obtained as a result of the optimization process. Conversely,

$$\mathbf{g}\left(\mathbf{q}, \dot{\mathbf{q}}, \ddot{\mathbf{q}}\right) = kx + dx^3 \tag{11}$$

is considered to be unknown throughout this section and is going to be approximated using a feed-forward NN. Hence, $\mathcal{N}_{\boldsymbol{\varphi}}$ is the mathematical function of the NN and $\boldsymbol{\varphi}$ is a set of non-physical parameters of the NN (weights and biases) which should be tuned during the optimization process in order to fit the unknown physics $\mathbf{g}$.

3.2. Identification of the hybrid model

Once the model is separated into the known and unknown parts, a hybrid identification architecture can be defined based on Fig. 2. The inputs of the model are the position, velocity and acceleration of the mass and the output is the external forcing τ. In this case, the known physics only depends on $\dot{x}$ and $\ddot{x}$, while it is considered to be known that the unmodelled spring depends only on x. Thus, the feed-forward NN is denoted as $\mathcal{N}_{\boldsymbol{\varphi}}(x, \boldsymbol{\varphi})$. During the optimization/training process, there are two set of parameters, $\boldsymbol{\varphi}$ and $\boldsymbol{\vartheta}$, to be simultaneously determined. Fig. 3 shows the scheme of the HM to be identified.

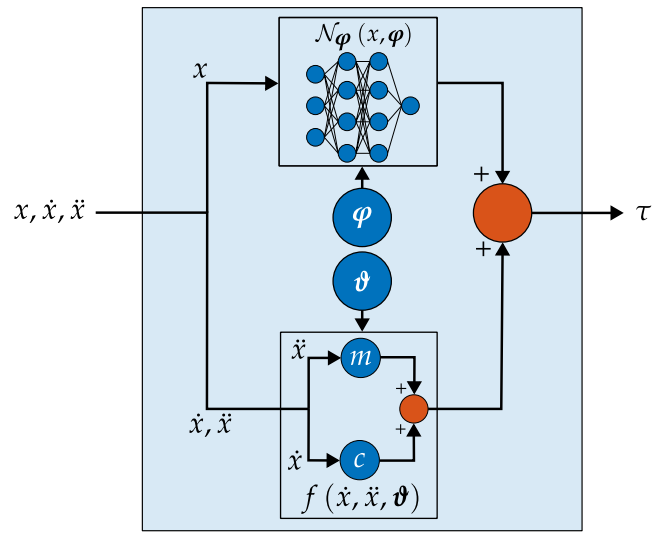

Fig. 3. Mass–Spring–Damper hybrid model for identification.

3.3. Experiments and results

The proposed hybrid identification model has been tested based on a numerical experiment. For this purpose, a Duffing Oscillator with parameters $m = 1$ kg, $c = 0.1$ N s/m, $k = 1$ N/m and $d = 0.1$ N/m^3 has been simulated by numerical integration under different sinusoidal loads for 100 s with a time-step of 0.5 s. The amplitude A and frequency f of the sinusoidal loads have been randomly picked from uniform distributions with bounds $A = [-10, 10]$ N and $f = [0, 5]$ Hz. The simulations have been distributed in a training data-set consisting of 50 simulations and a test data-set consisting of 20 simulations. The feed-forward NN used for this example consists of 2 hidden layers with 20 neurons each and it uses the $Tanh$ activation functions.

The model has been trained using the training data-set throughout 3000 epochs consisting of 200 time instants each. Great results were obtained: First, the model generalization capability has been tested using the test data-set. Fig. 4(a) shows the histogram of the predicted external force error and Fig. 4(b) shows the comparison between the predicted and actual external forces for a randomly picked simulation from the test data-set.

The feed-forward NN part of the model should fit the non linear spring characterized by $\mathbf{g}$. Fig. 4(b) shows the comparison between the actual function of the spring and the feed-forward NN approximation $\mathcal{N}_{\varphi}(x, \hat{\boldsymbol{\varphi}})$. Note that $\hat{\boldsymbol{\varphi}}$ are the estimated NN parameters during the optimization process.

As it can be seen in Fig. 5, the spring is perfectly characterized approximately for the displacement range $[-7.5, 7.5]$ metres but not outside this range. This effect was expected given that it is the amplitude of the external loads that controls the displacement of the system. Hence, the range of values taken in the training data set will define for which range the spring is correctly characterized. If the amplitude of the external loads is reduced, the spring will be characterized for a smaller range of displacement. Increasing the amplitude the effect will be opposite.

Finally, the identified values for the m and c parameters are $\hat{m} = 1.0000061$ kg and $\hat{c} = 0.009895446$ N s/m which are almost identical to the actual parameters $m = 1$ kg and $c = 0.01$ N s/m.

The results show clearly that the proposed hybrid modelling and identification approach is able to model non-linearities and identify the values of unknown physical parameters.

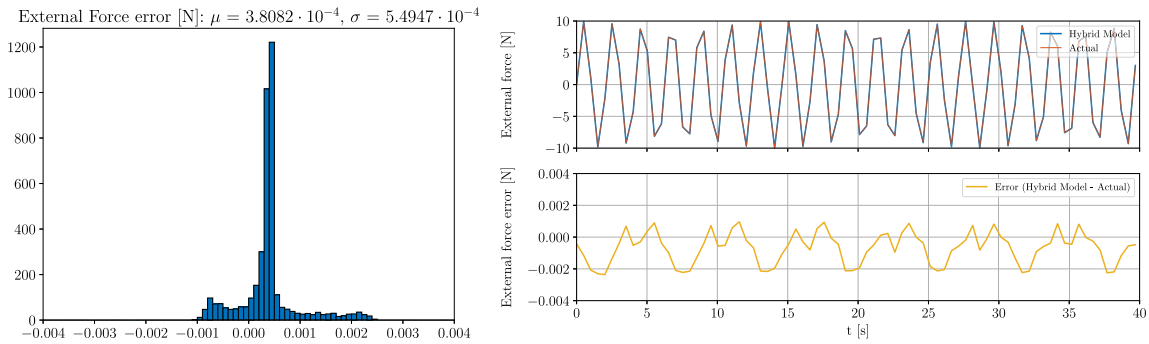

(a) Predicted external force error histogram.

(b) Comparison of between the HM results and the validation data.

Fig. 4. Model validation using the test data-set.

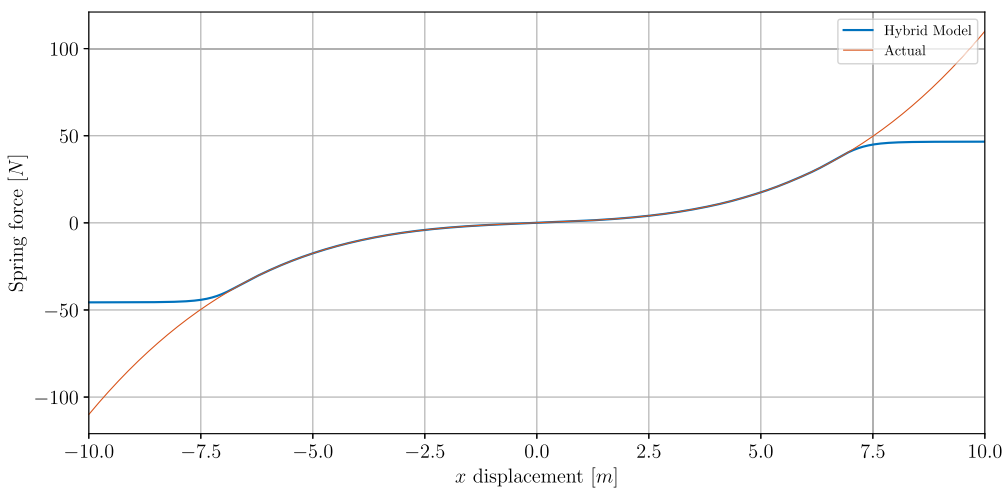

Fig. 5. Comparison between the actual non-linear spring and the hybrid model approximation.

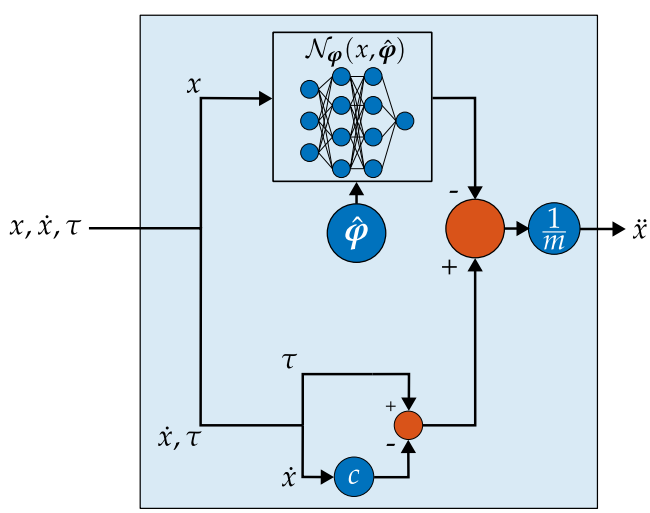

Fig. 6. Mass–spring–damper HM rearranged for forward dynamics numerical integration.

3.4. Model capabilities and practical applications

The fitted HM has a great advantage when compared to a *black-box* model, as it can be rearranged and used for numerical integration. For this purpose, the different blocks of the model in Fig. 3 must be thoroughly rearranged as it can be seen in Fig. 6

The HM in this form can be written as:

$$\ddot{x} = \frac{1}{m}\left(\tau - c\dot{x} - \mathcal{N}_{\boldsymbol{\varphi}}(x, \hat{\boldsymbol{\varphi}})\right) \tag{12}$$

where the non-linear spring is approximated by the feed-forward NN $\mathcal{N}_{\boldsymbol{\varphi}}(x, \hat{\boldsymbol{\varphi}})$, being $\hat{\boldsymbol{\varphi}}$ the estimated parameters of the NN. Evaluating the identified model with $\hat{\boldsymbol{\vartheta}}$ and $\hat{\boldsymbol{\varphi}}$, the original system can be simulated forward in time using Eq. (12). However, it can be even more interesting to run forward- or inverse-dynamic simulations using the very same model, but evaluating the physical parameters $\boldsymbol{\vartheta}$ with other arbitrary values maintaining unchanged the identified parameters of the NN. As the physical parameters are interpretable and hopefully prone to be modified, the identified model can be used for design.

The identified model has been written in state–space form and numerically integrated in time. Fig. 7 shows the comparison between the forward dynamic simulations performed with the actual system and the results obtained with the identified HM which uses estimated physical parameters $\hat{m}$ and $\hat{c}$ and the estimated NN parameters $\hat{\boldsymbol{\varphi}}$. In both cases, the same initial conditions, external loads and numerical integrator are used. It can be clearly seen that the discrepancies between the actual system and the identified model cause a negligible difference when predicting their behaviour. As the model has been built in continuous time, after identification it can be used for forward- and inverse-dynamics, using any kind of numerical integrator, with constant or adaptive step-size. The price to pay for these advantages is the need to have measurements of both the velocities and generalized accelerations in addition to the coordinates.

Additionally, the *grey-box* nature of the model in the sense that m and c are physical parameters, gives the possibility to tune them for design purpose. In the case of the system discussed throughout this

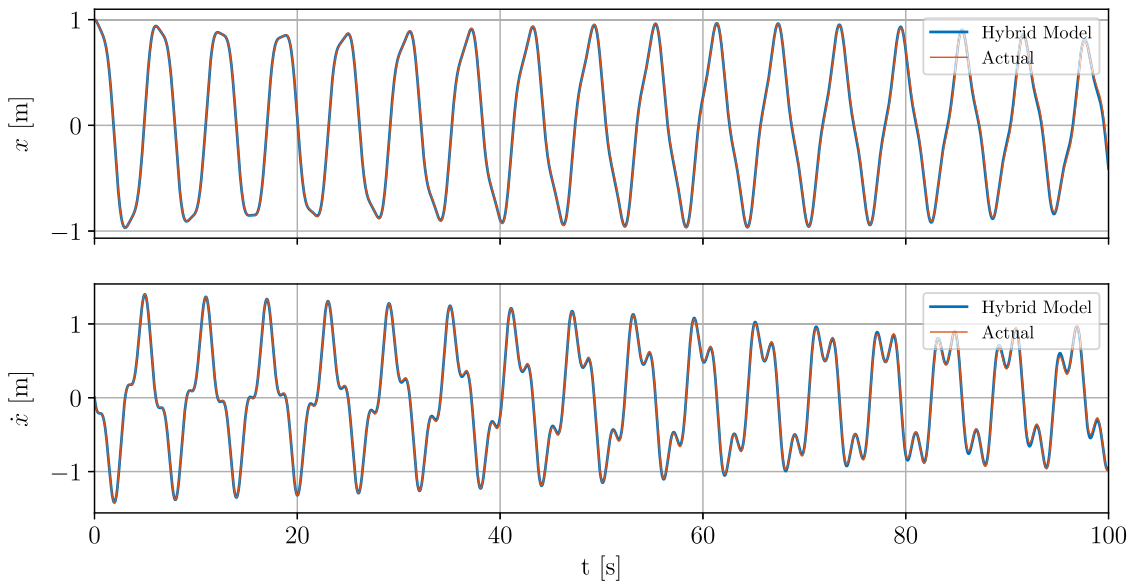

Fig. 7. Mass–Spring–Damper numerical integration comparison between the actual system and the identified HM.

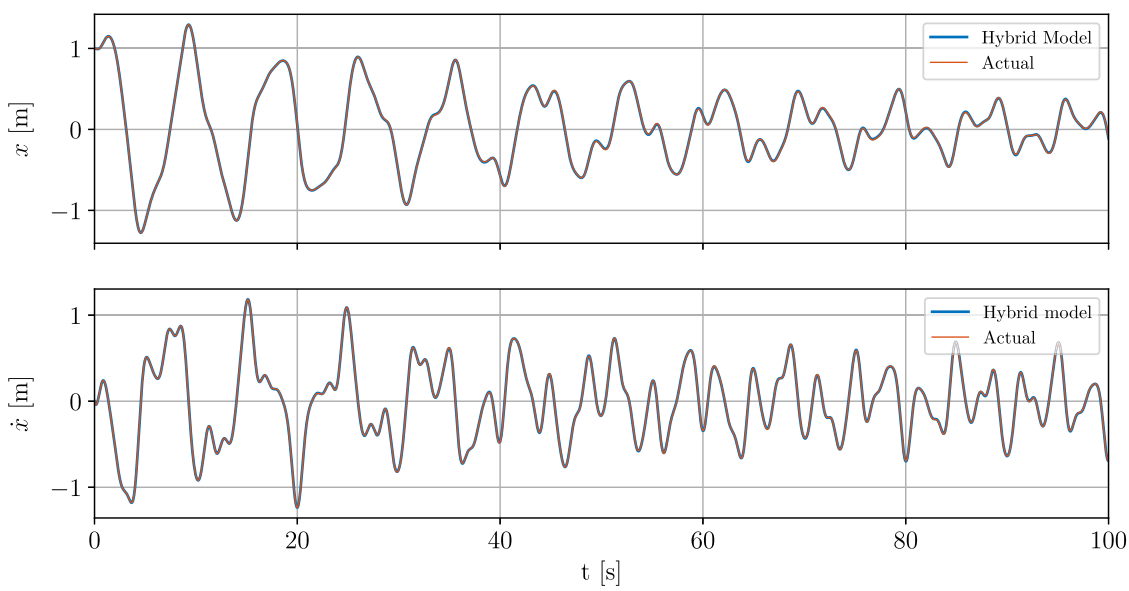

Fig. 8. Mass–Spring–Damper system comparison between the actual model with new parameters and HM with new parameters.

section, the identified non-linear spring should be valid for any values of the rest of the parameters if the displacement x does not violate the training range ±7.5 m. Fig. 8 shows the comparison between the numerical simulation of the actual model with new parameters and the modified HM, which has different values for the physical parameters: $m = 2$ kg and $c = 0.08$ N s/m, but uses the same NN with the identified parameters $\hat{\boldsymbol{\varphi}}$. The external load in this simulation is a summation of sinusoidal loads with amplitudes 1 m, 0.5 m, 1.2 m and frequencies 0.5 Hz, 0.75 Hz, 0.3 Hz.

The discrepancies between the numerical simulations are again negligible showing that modifying physical parameters is perfectly possible in the HM. This opens the door to run simulations with different parameters without the need of identifying the full system again. Moreover, there is no need of building a new real system with different physical parameters, since it can be analysed relying solely on simulation.

Finally, the fitted HM can be easily linearized thanks to automatic differentiation. In this case, the only non-linear spring can be linearized around the fixed point $x = 0$ by calculating the partial derivative of the single output of the NN with respect to the input x and subsequently evaluating it at the fixed point. The theoretical value is the linear parameter of the spring k which has a "true" value of 1 N/m. When linearizing the non-linear spring modelled by the NN the estimated value of the parameter k is 1.000254 N/m, showing that the estimated linearized model is quite accurate. Note that, the possibility of linearizing the HM is of great interest for the control community and also opens the door to calculate the natural frequencies of the identified systems.

4. Real-world experiment: Energy harvesting device

After testing the validity of the proposed methodology with the simple numerical example of Section 3, a real world mechanical system is modelled and identified in this section. This mechanical system is the multidirectional ultra-low frequency energy harvesting device developed by Castellano-Aldave et al. in Castellano-Aldave et al. (2023).

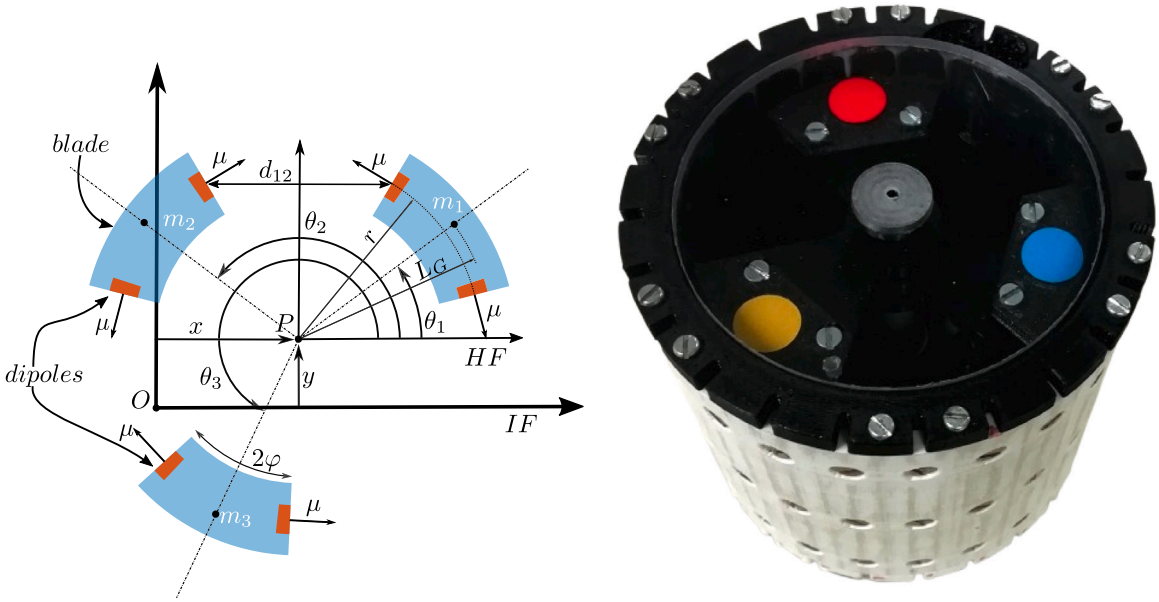

(a) Energy harvesting device scheme.

(b) Actual energy harvesting device.

Fig. 9. Energy harvesting device presented in Castellano-Aldave et al. (2023).

4.1. System description

The harvester is composed of three blades which have a movement caused by vibration. This movement generates electricity due to the variation the blades create in the magnetic field generated by the coils surrounding them. Fig. 9 shows a scheme and the actual device.

The dynamics of each of the blades can be characterized by

$$\left(mL_G^2 + I_{zz}\right)\ddot{\theta}_i + \left(\sin^2\left(12\theta_i\right)b_g + b_0\right)\dot{\theta}_i + g_i\left(\theta_i, \theta_j, \theta_k\right) = \tau_i \tag{13}$$

where five different terms can be noted: The inertial terms which multiply the angular acceleration $\ddot{\theta}_i$, the two damping terms which multiply the angular velocity $\dot{\theta}_i$, the magnetic term which is unknown and depends on the angular positions of the three blades $\theta_i, \theta_j, \theta_k$ and the external torque τ_i. Note that the inertial terms can be grouped in the base parameter

$$I_{eq} = mL_G^2 + I_{zz} \tag{14}$$

which represents the inertia with respect to point P of Fig. 9(a). The rest of the parameters are the mass of a single blade m, the distance from point P to the centre of mass of each blade L_G, the inertia moment with respect to the centre of mass of each blade I_{zz}, the electrical damping coefficient b_g and the mechanical viscous damping coefficient b_0.

4.2. Identification of the hybrid model

In this case, the unknown physics to be modelled and identified are the magnetic interactions between the blades noted by $g_i\left(\theta_i, \theta_j, \theta_k\right)$ in Eq. (13). Conversely, the set of unknown physical parameters to be identified which are the same for each of the three blades is composed by

$$\boldsymbol{\vartheta} = \begin{Bmatrix} b_g \\ b_0 \\ I_{eq} \end{Bmatrix}. \tag{15}$$

Fig. 10 shows the scheme of the HM to be identified. The inputs of the model are the position, velocity and acceleration of the blades and the output is the external forcing τ_i. The unknown physics (magnetic interaction) are modelled using a feed-forward NN denoted by $\mathcal{N}_{\boldsymbol{\varphi},i}(\boldsymbol{\theta}, \boldsymbol{\varphi})$.

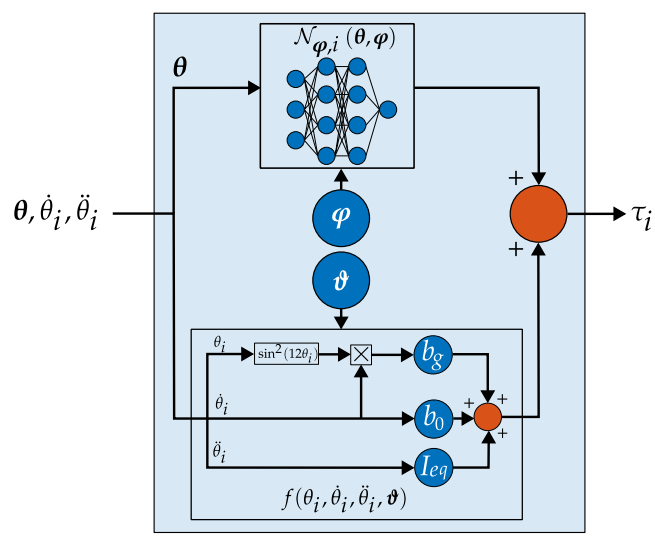

Fig. 10. Harvester identification model architecture.

Note that, the NN uses only the angular positions of the three blades $\boldsymbol{\theta}$ as input since the magnetic interaction is known to be affected by the relative position of the blades. Hence, the physical knowledge is used again to constrain the solution span. Once again, $\boldsymbol{\varphi}$ denotes the feed-forward network parameters and $\boldsymbol{\vartheta}$ the physical parameters to be estimated.

For this specific system, additional physical constraints are added to the HM by exploiting the intrinsic characteristics of the mechanical system. First, as shown in Fig. 10 the HM calculates the external torque τ_i for a single blade, but using the three angular positions $\boldsymbol{\theta}$ since the magnetic term calculated by $\mathcal{N}_{\varphi,i}$ depends on the relative positions between the blades. Thanks to the symmetry of the system, it is possible to calculate the torque for each of the blades by permuting the inputs of the NN: the torque for blade number i is calculated by using $\left\{\theta_i, \theta_j, \theta_k\right\}^\top$ as the input vector of $\mathcal{N}_{\varphi,i}$, the torque for blade j using the input vector $\left\{\theta_j, \theta_k, \theta_i\right\}^\top$ and the torque for blade k using $\left\{\theta_k, \theta_i, \theta_j\right\}^\top$ as the input vector. The ability of permuting the inputs is of great advantage, since

the HM is smaller and can be easily adapted to a higher number of blades. Note that, the permutation is possible thanks to the assumption that physical parameters $\boldsymbol{\vartheta}$ are the same for the three blades.

Additionally, since the set of physical parameters must have physical sense, they are constrained to be positive. The use of the structure in Fig. 10 *i.e.* using the same model to calculate the torque for the individual blades, forces the physical parameters to be equal for all blades. The blades, the bearings they use and the coils are the same, enforcing the assumption and reducing the number of parameters needed.

Furthermore, the generated power can be approximated by

$$p_g = \left(\sum_{i=1}^{3} \sin^2 \left(12\theta_i\right) \dot{\theta}_i^2 \right) b_g \tag{16}$$

and it is physically measured in the device. Hence, it is possible to compare the theoretical power with the measured power. This error can be added to the loss function of the HM for all the time instants contained in an epoch. The loss function is given by

$$\mathcal{L} = \lambda_1 \|\mathbf{T} - \hat{\mathbf{T}}\| + \lambda_2 \|\mathbf{p}_g - \hat{\mathbf{p}}_g\| \tag{17}$$

where λ_1 and λ_2 are two weighting coefficients, $\mathbf{T} = \left\{\boldsymbol{\tau}_i, \boldsymbol{\tau}_j, \boldsymbol{\tau}_k\right\}^\top$ is the vector of measured external torques, $\hat{\mathbf{T}} = \left\{\hat{\boldsymbol{\tau}}_i, \hat{\boldsymbol{\tau}}_j, \hat{\boldsymbol{\tau}}_k\right\}^\top$ is the vector of external torques estimated by the HM, $\mathbf{p}_g$ is the measured generated power and $\hat{\mathbf{p}}_g$ is the generated power estimated by Eq. (16).

4.3. Experiments and results

The experimental framework and the measurement procedure is analogue to the one presented by Plaza et al. in Plaza et al. (2024). The actual data and its description can be found in Bacaicoa et al. (2024). The angular positions, velocities and accelerations of the blades are obtained from video processing and the external torque is calculated following

$$\tau_i = mL_G \left(\ddot{x} \sin\theta_i - \ddot{y} \cos\theta_i\right) \tag{18}$$

where $\ddot{x}$ is given by the accelerometer mounted in the energy harvesting device and m and L_G are physically measured. Note that $\ddot{y}$ is considered zero since the experiments are carried out in a platform moving only in the x direction.

A total of 12 experiments were carried out, 3 repetitions for each of the 4 selected frequencies (500 mHz, 750 mHz, 1000 mHz, 1200 mHz). The 3 experiments at 1000 mHz are used to test the model and the remaining 9 experiments at 500 mHz, 750 mHz and 1200 mHz for training. The optimal results were obtained using an equal weighting on the loss function *i.e.* $\lambda_1 = \lambda_2 = 1$ and the ADAM optimizer with a learning rate of 10^{-3}. The NN is built with two hidden layers with 20 neurons each which use the *Tanh* activation function.

The model was trained for 120 epochs consisting of 200 time instants each, again great results were obtained. Note that in each epoch, the model is evaluated three times permuting the vector of inputs $\boldsymbol{\theta}$ in order to calculate each component of the vector $\hat{\mathbf{T}}$ and compute the value of the loss function. The generalization capability and independence of excitation frequency (note that the frequency of the test data-set is not used for training) are clear. Fig. 11(a) shows the histogram of the generated power error estimated for the test data and Fig. 11(b) shows the histogram of the torque error estimated with the test data. In both cases, the error mean μ is close to zero and the standard deviation σ is low.

The comparison of time series between the HM predicted torque and a few samples taken from the test data-set shows also great results as it can be seen in Fig. 12.

The predicted power is also really accurate as it can be seen in Fig. 13. From this result it can be concluded that both the physical generated power model and the value of parameter b_g are accurate.

4.4. Model capabilities and practical applications

As shown in Section 3 the model can be rearranged and used for numerical integration. Fig. 14 shows the structure of the HM for numerical integration purposes.

The HM in this form can be written as:

$$\ddot{\theta}_i = \frac{1}{I_{eq}} \left[\tau_i - \left(\sin^2\left(12\theta_i\right) b_g + b_0\right) \dot{\theta}_i - \mathcal{N}_{\boldsymbol{\varphi},i}(\boldsymbol{\theta}, \hat{\boldsymbol{\varphi}})\right] \tag{19}$$

The non-linear unknown magnetic interaction is approximated by the feed-forward NN $\mathcal{N}_{\boldsymbol{\varphi},i}(\boldsymbol{\theta}, \hat{\boldsymbol{\varphi}})$. The estimated values $\hat{\boldsymbol{\vartheta}}$ can be used to simulate the original system and at the same time, the HM allows any other value of $\boldsymbol{\vartheta}$ opening the door to optimize the design of the energy harvester. This system can be written in state–space form and numerically integrated in time. Fig. 15 shows an example of the numerical integration of the HM without external forcing and with the use of the estimated parameters $\hat{b}_g$, $\hat{b}_0$ and $\hat{I}_{eq}$.

As expected, the blades move towards an equilibrium position where the magnetic forces are cancelled and the velocities tend to zero. The equilibrium position is very close to the expected point with blades nearly spaced 120°. Moreover, the generated power has a peak at the beginning when the velocities are non-zero and goes towards zero as the movement is damped. Fig. 16(a) shows and additional numerical simulation for an external forcing with a sinusoidal acceleration of amplitude 1 $\mathrm{m/s^2}$ and a frequency of 0.5 Hz.

As it can be seen, the blades move pseudo-harmonically, with the amplitudes of blades 2 and 3 being the highest. Blade 1 has a movement with less amplitude due to the fact that it tends to align with the direction of external excitation. The generated power varies through the simulation showing really low values due to the low amplitude and low frequency nature of the external excitation.

Additionally, as explained in Section 3.4 the physical parameters can be manipulated in order to optimize the design of the system. The ability to tune the parameters is of particular interest, as it leaves the door open to simulate the power output of the model under different configurations without requiring to construct new prototypes. For example, different values of inertia may be tested to predict the generated power of the model.

Finally, the magnetic interaction modelled with the NN can be linearized. In this case, the value of the linearization is unknown *a priori* since the data comes from experiments and not numerical simulations with known parameters. Hence, the linearization could be validated by simulating the original HM and the linearized HM close to the fixed point used for the linearization. Fig. 17(a) shows the comparison for the same simulation carried out with the linearized HM and the original non-linear HM. The initial position of the blades is the equilibrium position $\boldsymbol{\theta} = \left\{\theta_i, \theta_j, \theta_k\right\}^\top$ with a perturbation of $\{0°, 10°, -10°\}^\top$. The initial velocities are zero and there is no external forcing.

As it can be seen, both time-series are very similar. Hence, the linearized HM is valid in the neighbourhood of the equilibrium position and its eigenvalues can be analysed. Fig. 17(b) shows the eigenvalues of the linearized system. As it can be seen, the system has a purely real eigenvalue close to the origin which dominates the dynamics of the system. Since the eigenvalue is purely real, the system is overdamped and there are no oscillations on its free response (see Fig. 17(a)).

4.5. Comparison with other models

This section will compare the proposed modelling technique with other methodologies, in terms of accuracy and capabilities. To this end, 5 additional models have been trained:

1. Pure NN, τ as output: A NN which uses the angular positions, velocities and accelerations of the blades to predict the torque applied to them. Therefore, the model has 9 inputs and 3 outputs, and no prior physical-knowledge or information is used.

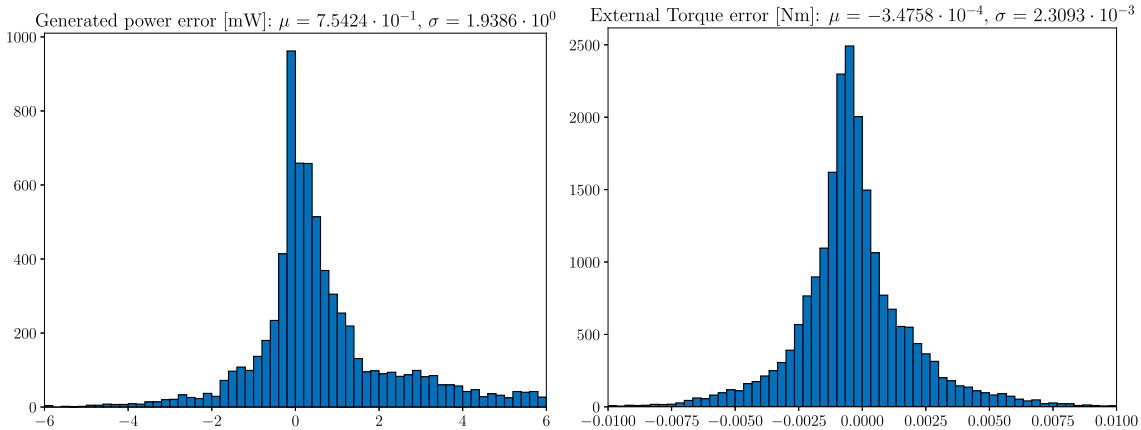

(a) Predicted power error histogram. (b) Predicted external torque error histogram.

Fig. 11. Model validation using the test data-set.

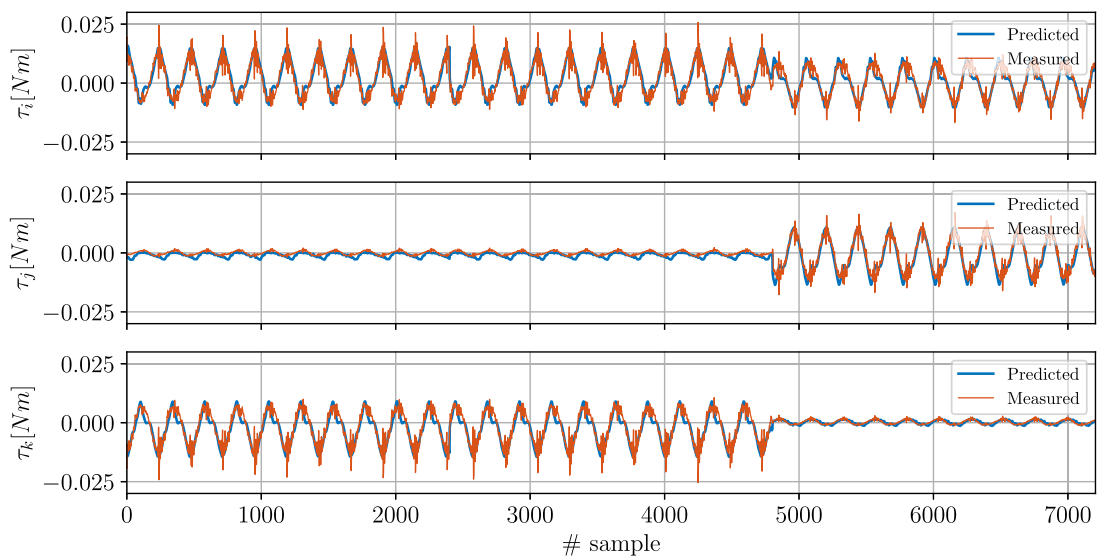

Fig. 12. Comparison of the identified HM prediction of the external actuation and the experimental validation data.

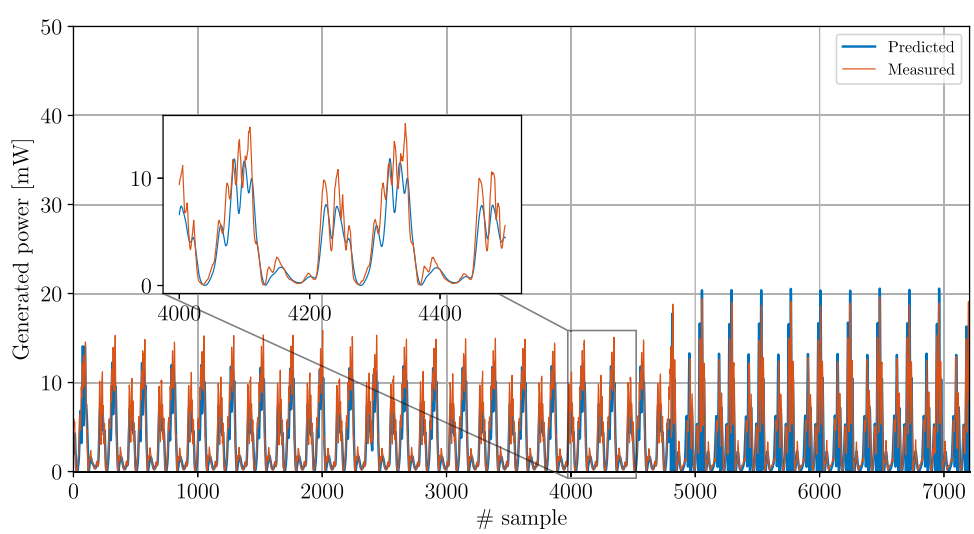

Fig. 13. Comparison power model prediction and the experimental validation data.

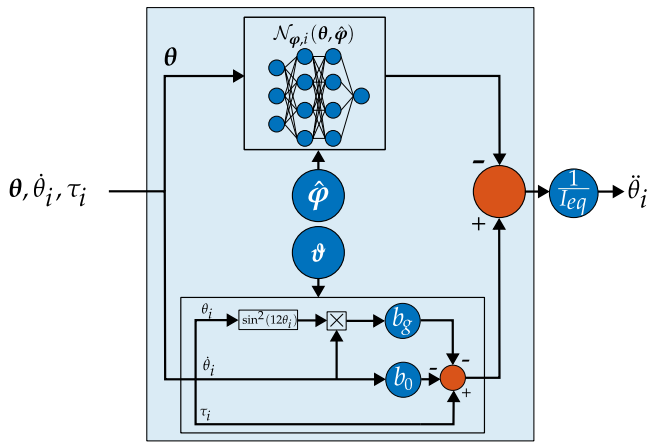

Fig. 14. Harvester HM rearranged for forward dynamics numerical integration.

2. Pure NN, $\ddot{\theta}$ as output: A NN which uses the angular positions and velocities of the blades, as well as the torque applied to them. It predicts the angular accelerations of the blades. Therefore, the model has 9 inputs and 3 outputs, and no prior physical-knowledge or information is used.
3. Cyclic NN, τ as output: A NN which uses the angular positions of the blades, and the velocity and acceleration of a single blade. The external torque applied to a certain blade is calculated. The angular positions are permuted to obtain predictions for other blades (the same procedure as in the proposed hybrid modelling is used), adding some physical insight to the model.
4. Cyclic NN, $\ddot{\theta}$ as output: A NN which uses the angular positions of the blades, and the velocity and torque applied to a single blade. The angular acceleration of a certain blade is calculated. The angular positions are permuted to obtain predictions for other blades (the same procedure as in the proposed hybrid modelling is used), adding some physical insight to the model.
5. Physics based: A purely physics-based model with a dipole model for the magnetic interaction between the blades. This physical model is explained thoroughly in Castellano-Aldave et al. (2023).
6. The hybrid model proposed in this paper.

The NN based models presented in this comparison have the same number of hidden layers and neurons per layer as the hybrid model. Additionally, they use the same activation function and are trained with the same algorithm and learning rate to enable a fair comparison. Fig. 18 shows the comparison between different models for 1000 test samples of blade i. Fig. 18(a) compares the models which predict applied torque and Fig. 18(b) the models which predict acceleration.

As it can be seen, the NN with cyclic permutation which predicts applied torque and the hybrid model achieve the best results. In Table 1 a normalized standard deviation (std):

$$\epsilon = \frac{std(err)}{std(measured)} \tag{20}$$

is used to compare the different models. Additionally, other characteristics of the models are compared in the remaining columns:

- D.D. (Direct Dynamics): The possibility to run *direct dynamic* simulations using the model to predict the acceleration and integrate numerically in time.
- I.D. (Inverse Dynamics): The possibility to run *inverse dynamic* simulations using the model to predict the external forcing.
- Lin (Linearization): The possibility of linearizing the model at an equilibrium point.

Table 1
Comparison between different models.

No.	Model	ϵ	D.D.	I.D.	Lin	Design
1	Pure NN, τ as output	1.34	✗	✓	✓	✗
2	Pure NN, $\ddot{\theta}$ as output	1.17	✓	✗	✓	✗
3	Cyclic NN, τ as output	0.39	✗	✓	✓	✗
4	Cyclic NN, $\ddot{\theta}$ as output	0.61	✓	✗	✓	✗
5	Physics based	0.68	✓	✓	✓	✓
6	Hybrid model	0.43	✓	✓	✓	✓

- Design: The possibility of using the model for design purposes by varying the values of its parameters with physical meaning. Also interpretability, as the parameters need to have a known physical meaning in order to possibly modify them with certain physical criterion.

Models No. 1 to 4 are black-box models based on NNs and they depend exclusively on parameters with no physical meaning. Thus, this parameters cannot be modified for design purposes, since they will not modify a physical quantity, but a synthetic parameter without direct physical interpretation. Furthermore, these models cannot be inverted to run both direct and inverse dynamic simulations, reducing their utility. Note that, the models with accelerations as output (No. 2 and 4) are difficult to fit since they use the noisy torque signal as input variable. Finally, the models with cyclic NNs (No. 3 and 4) are more precise, showing the benefits of adding physical knowledge to the models. It is clear that pure NN models (No. 1 and 2) would require more layers or more neurons per layer to fit the data correctly, increasing the computational cost.

Model No. 5 has the same capabilities as the hybrid model, but uses a physics based dipole model for the magnetic term. This term depends on a single variable, reducing the flexibility of the model. Hence, the physical model does not fit the data correctly and it is not precise enough for simulation and design purposes.

The hybrid model has the second best ϵ but, it exceeds the Cyclic NN model with its capabilities: It allows direct and inverse dynamic simulations and its a great tool for design thanks to the possibility of varying the values of the parameters with physical meaning (i.e. inertia, viscous and electrical damping ratios).

5. Conclusions and future works

This work presents a new hybrid approach for modelling and identifying mechanical systems with partially known physics. The framework combines the known physics with a feed-forward neural network, to model the unknown phenomena, creating a hybrid model. The model depends on a set composed of physically meaningful and not meaningful parameters.

The mathematical model can be separated into two terms. The first term is based on physical laws and its structure is known, but some parameter values may be unknown. The second term refers to the unknown part of the system and this work proposes to model it with a neural network. In addition, it is possible to introduce further physical information to the second term. For example, if the input dependence of the term is known, the neural network can be designed with that particular input. Other physical constraints that the model must satisfy, such as conservation of mass or energy, can also be added. Once the model is designed and the constraints are applied, the parameters of both terms are estimated simultaneously during the training process. The contributions of the proposed methodology are the following ones:

- The resulting hybrid model can be rearranged and easily simulated in time using any time-integration scheme, allowing for highly flexible simulations of the modelled system.

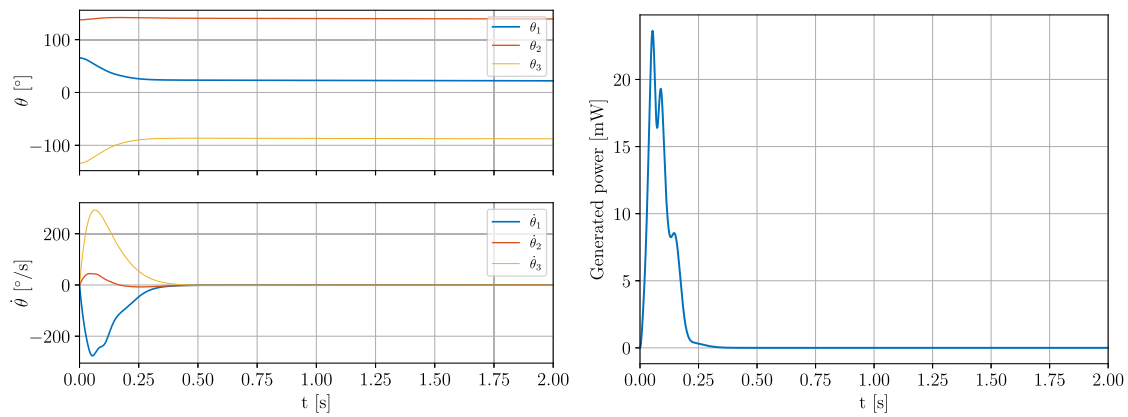

(a) Time-series of the state variables.

(b) Time-series of the generated power.

Fig. 15. Numerical integration using the HM without external forcing.

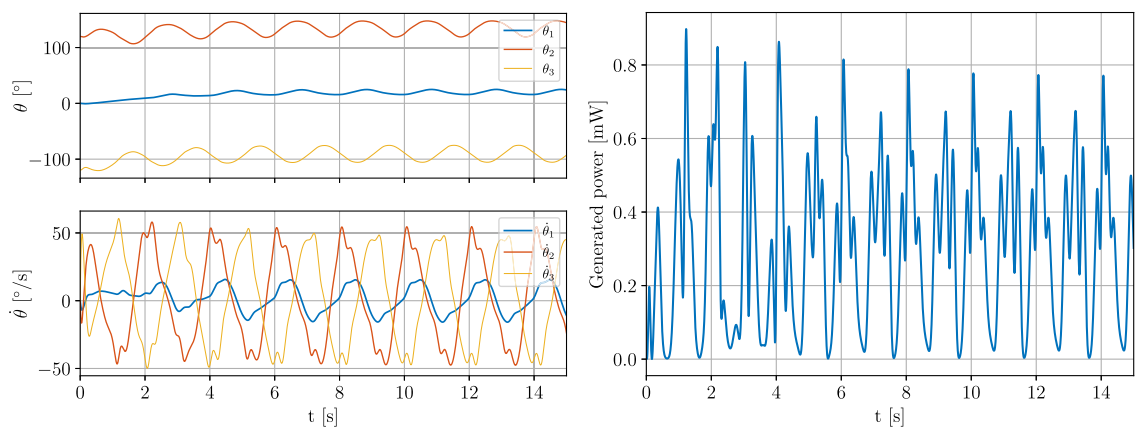

(a) Time-series of the state variables.

(b) Time-series of the generated power.

Fig. 16. Numerical integration using the HM with external forcing.

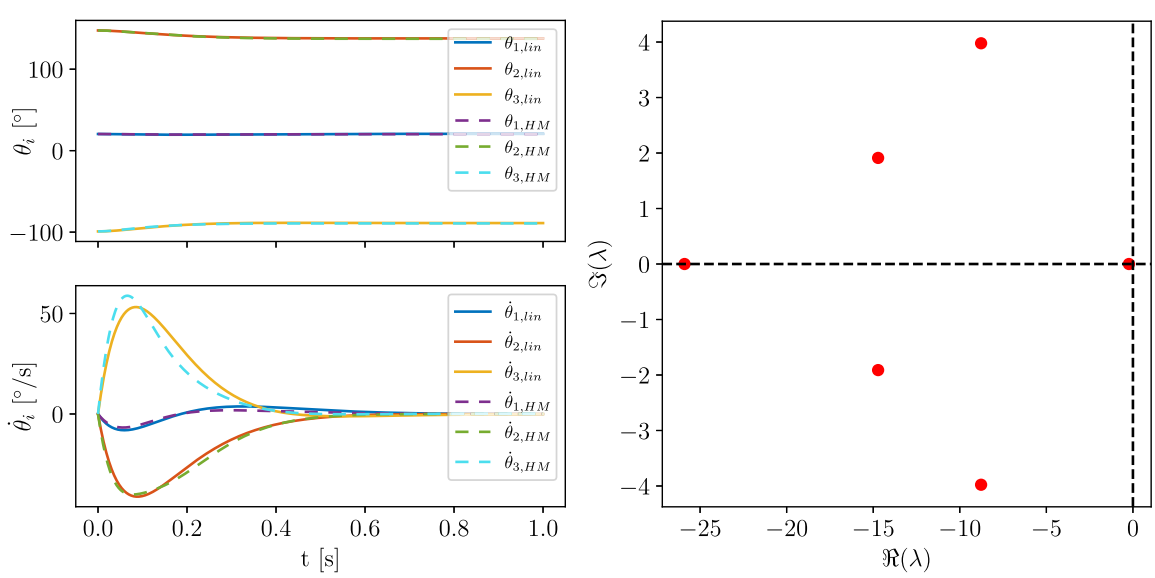

(a) Time-series comparison between linearized HM and the full HM.

(b) Eigenvalues of the linearized HM.

Fig. 17. Harvester HM linearization.

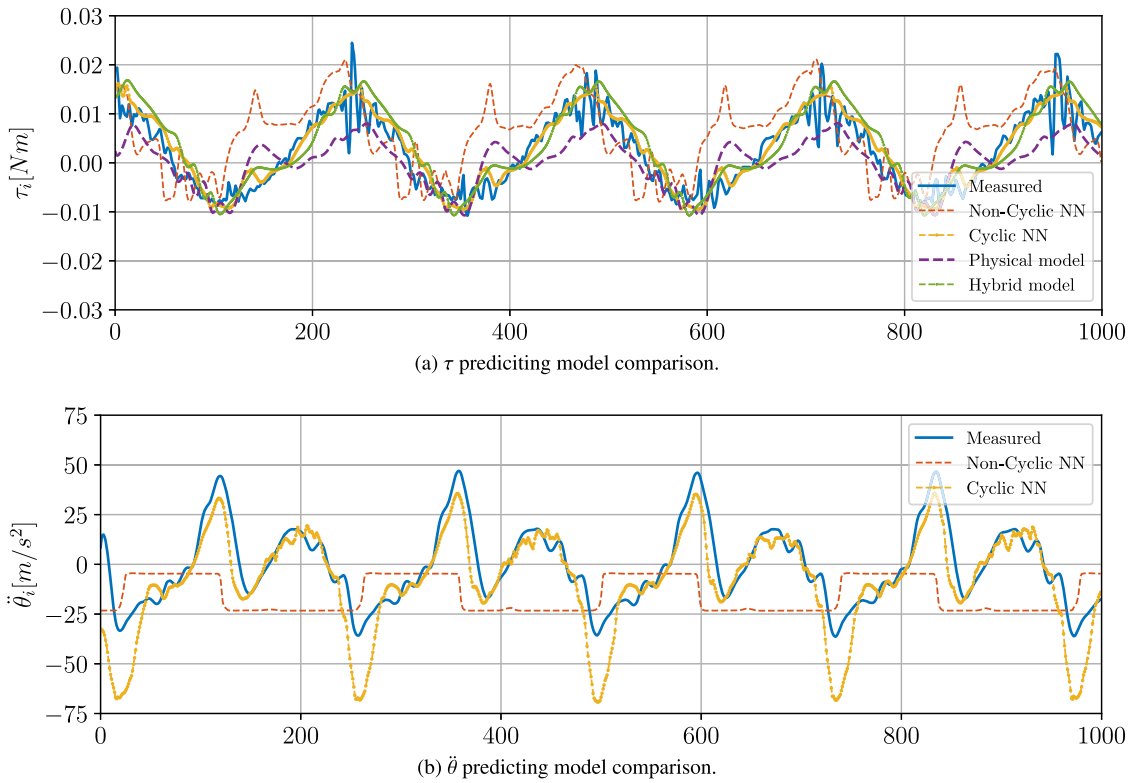

(a) τ prediciting model comparison.

(b) $\ddot{\theta}$ predicting model comparison.

Fig. 18. Different model comparison for the 1000 samples of blade 1.

- Some of the estimated parameters have a physical meaning (inertia, mass or damping ratios) and they can be modified without affecting the validity of the model. This feature is particularly interesting since the values of these parameters can be conveniently modified for design purposes of a mechanical system.
- The trained model can be used outside of the training spectrum, i.e. external loads different from those of the training data can be simulated.
- The possibility of linearizing the hybrid model is of great interest, allowing for eigenvalue analysis and the implementation of linear control techniques.

Despite these features, the methodology has the limitation that if the physics represented by the neural network changes, the model must be retrained. Moreover, the procedure is "manual" and the hybrid model must be designed ad-hoc for each system.

For the proposed methodology to be validated, two different experiments have been carried out, and both of them show the capabilities of the resulting hybrid models.

The first experiment was virtual and it was intended to test the validity of the methodology, as the results can be verified. In this example a certain term of the system was assumed to be unknown and it was modelled with a neural network. The identified model was successfully validated by means of direct and inverse dynamic simulations and linearization. Moreover, it has also been shown that the methodology is valid to modify the system by varying the values of the parameters with physical meaning.

The second experiment was carried out with a real energy harvesting device. There is an important unknown magnetic interaction between its moving parts, which has been modelled with a neural network. In this case, further physical information was added to both the neural network and the loss function. First, the model was validated by checking that it fitted the experimental validation data correctly. Then, it was verified that the results during direct dynamic simulations and linearization were consistent with the physics of the real system. This verified model could be used for design purposes by modifying the values of the physically meaningful parameters. During the validation process, the ϵ value of the hybrid model was compared to other models. On the one hand, the value of 0.43 obtained for the hybrid model was only improved by a cyclic neural network model, which scored a value of 0.39. Despite being more precise, the neural network cannot be integrated in time and its parameters cannot be modified without affecting the physics. Thus, its application is limited to external torque prediction. On the other hand, the purely based physics model had an ϵ of 0.68, far from the precision of the hybrid model.

Overall, the presented methodology has shown to be a tool for modelling, analysing, simulating and optimizing mechanical devices. However, there is still room for improvement. The future work is related to incorporating more physical information to the model in some other different manners. For the cases presented in this paper, it would be desirable to enforce the magnetic torques to derive from a potential or to enforce the system to be stable, at least in its linearized form.

CRediT authorship contribution statement

Mikel Merino-Olagüe: Validation, Methodology, Conceptualization, Writing – original draft, Software, Data curation. **Xabier Iriarte:** Writing – review & editing, Methodology, Conceptualization, Supervision, Investigation. **Carlos Castellano-Aldave:** Software, Methodology, Data curation, Resources, Formal analysis, Conceptualization. **Aitor Plaza:** Writing – review & editing, Supervision, Methodology, Funding acquisition, Validation, Project administration, Investigation, Conceptualization.

Declaration of competing interest

The authors declare that they have no known competing financial interests or personal relationships that could have appeared to influence the work reported in this paper.

Acknowledgements

This paper has been supported by the Public University of Navarre under grant PJUPNA2024-11690, and also by the Spanish Research Agency under grants PDC2023-145876-C22, PID2022-138510OB-C21, TED2021-131052B-C21. Open access funding provided by Universidad Pública de Navarra.

Data availability

Data will be made available on request.

References

Abdellatif, H., Heimann, B., Grotjahn, M., 2005. Statistical approach for bias-free identification of parallel manipulator affected by large measurement noise. In: 44th IEEE Conference on Decision and Control, and the European Control Conference 2005. IEEE, Seville, Spain, pp. 3357–3362.

Alberer, D., Hjalmarsson, H., Del Re, L., 2012. System identification for automotive systems: Opportunities and challenges. In: Identification for Automotive Systems. pp. 1–10.

Armstrong, B., 1989. On finding exciting trayectories for identification experiments involving systems with nonlinear dynamics. Int. J. Robot. Res. 8, 28–48.

Armstrong-Hélouvry, B., 1991. Control of Machines with Friction. Kluwer Academic Publishers, Boston.

Askari, E., Gorgoretti, D., Crevecoeur, G., 2024. Hybrid modeling of multibody vehicles with partially known physics: discovering complex behaviors of tires. Multibody Syst. Dyn. http://dx.doi.org/10.1007/s11044-024-09983-3, URL: https://link.springer.com/10.1007/s11044-024-09983-3.

Aster, R.C., Borchers, B., Thurber, C.H., 2005. Parameter estimation and inverse problems. URL: https://api.semanticscholar.org/CorpusID:40705516.

Atkeson, C., An, C., Hollerbach, J., 1986. Estimation of inertial parameters of manipulator loads and links. Int. J. Robot. Res. 5, 101–119.

Ayankoso, S., Olejnik, P., 2023. Time-series machine learning techniques for modeling and identification of mechatronic systems with friction: A review and real application. Electronics 12, 3669. http://dx.doi.org/10.3390/electronics12173669, URL: https://www.mdpi.com/2079-9292/12/17/3669.

Bacaicoa, J., Hualde-Otamendi, M., Merino-Olagüe, M., Plaza, A., Iriarte, X., Castellano-Aldave, C., Carlosena, A., 2024. Dataset for the identification of a ultra-low frequency multidirectional energy harvester for wind turbines. Data Brief 57, 111126. http://dx.doi.org/10.1016/j.dib.2024.111126, URL: https://www.sciencedirect.com/science/article/pii/S2352340924010886.

Bao, N., Chen, Q., Jiang, T., 1996. Modelling and identification of a wind turbine system. Wind Eng. 20, 203–218, URL: http://www.jstor.org/stable/43749615.

Bekey, G.A., 2008. Springer handbook of robotics (b. siciliano and o. khatib; 2008)[book review]. IEEE Robot. Autom. Mag. 15, 110–110.

Bernard, R., Albright, S., 1993. Robot Calibration. Springer Science & Business Media.

Bradbury, J., Frostig, R., Hawkins, P., Johnson, M.J., Leary, C., Maclaurin, D., Necula, G., Paszke, A., VanderPlas, J., Wanderman-Milne, S., Zhang, Q., 2018. JAX: composable transformations of python+numpy programs. URL: http://github.com/jax-ml/jax.

Brunton, S.L., Proctor, J.L., Kutz, J.N., 2016. Discovering governing equations from data by sparse identification of nonlinear dynamical systems. Proc. Natl. Acad. Sci. 113, 3932–3937.

Calafiore, G., Indri, M., Bona, B., 2001. Robot dynamic calibration: optimal excitation trajectories and experimental parameter estimation. J. Robot. Syst. 18, 55–68.

Castellano-Aldave, C., Carlosena, A., Iriarte, X., Plaza, A., 2023. Ultra-low frequency multidirectional harvester for wind turbines. Appl. Energy 334, 120715. http://dx.doi.org/10.1016/j.apenergy.2023.120715, URL: https://linkinghub.elsevier.com/retrieve/pii/S030626192300079X.

Chen, R.T.Q., Rubanova, Y., Bettencourt, J., Duvenaud, D., 2019. Neural ordinary differential equations. URL: http://arxiv.org/abs/1806.07366, arXiv:1806.07366 [cs, stat].

Cranmer, M., Greydanus, S., Hoyer, S., Battaglia, P., Spergel, D., Ho, S., 2020. Lagrangian Neural Networks. URL: http://arxiv.org/abs/2003.04630, arXiv:2003.04630 [cs].

Cuomo, S., Di Cola, V.S., Giampaolo, F., Rozza, G., Raissi, M., Piccialli, F., 2022. Scientific machine learning through physics informed neural networks: Where we are and what is next. J. Sci. Comput. 92, 88. http://dx.doi.org/10.1007/s10915-022-01939-z, URL: https://link.springer.com/10.1007/s10915-022-01939-z.

De Groote, W., Kikken, E., Hostens, E., Van Hoecke, S., Crevecoeur, G., 2022. Neural network augmented physics models for systems with partially unknown dynamics: Application to slider-crank mechanism. IEEE/ASME Trans. Mechatron. 27, 103–114. http://dx.doi.org/10.1109/TMECH.2021.3058536, URL: https://ieeexplore.ieee.org/document/9352565/.

Denavit, J., Hartenberg, R.S., 1955. A kinematic notation for lower-pair mechanisms based on matrices.

Doumiati, M., Charara, A., Victorino, A., Lechner, D., 2012. Vehicle Dynamics Estimation using Kalman Filtering: Experimental Validation. John Wiley & Sons.

Ebers, M.R., Steele, K.M., Kutz, J.N., 2023. Discrepancy modeling framework: Learning missing physics, modeling systematic residuals, and disambiguating between deterministic and random effects. URL: http://arxiv.org/abs/2203.05164, arXiv:2203.05164 [math, stat].

Farhat, N., Mata, V., Page, Ã., Valero, F., 2008. Identification of dynamic parameters of a 3-DOF RPS parallel manipulator. Mech. Mach. Theory 43, 1–17. http://dx.doi.org/10.1016/j.mechmachtheory.2006.12.011, URL: https://linkinghub.elsevier.com/retrieve/pii/S0094114X07000079.

Faroughi, S.A., Pawar, N.M., Fernandes, C., Raissi, M., Das, S., Kalantari, N.K., Kourosh Mahjour, S., 2024. Physics-guided physics-informed, and physics-encoded neural networks and operators in scientific computing: Fluid and solid mechanics. J. Comput. Inf. Sci. Eng. 24, 040802. http://dx.doi.org/10.1115/1.4064449, URL: https://asmedigitalcollection.asme.org/computingengineering/article/24/4/040802/1193884/Physics-Guided-Physics-Informed-and-Physics.

Gautier, M., 1991. Numerical calculation of the base inertial parameters of robots. J. Robot. Syst. 8, 485–506.

Gautier, M., Khalil, W., 1992. Excitation trajectories for the identification of base inertial parameters of robots. Int. J. Robot. Res. 11, 362–375.

Greydanus, S., Dzamba, M., Yosinski, J., 2019. Hamiltonian neural networks. Adv. Neural Inf. Process. Syst. 32.

Haghighat, E., Raissi, M., Moure, A., Gomez, H., Juanes, R., 2021. A physics-informed deep learning framework for inversion and surrogate modeling in solid mechanics. Comput. Methods Appl. Mech. Engrg. 379, 113741. http://dx.doi.org/10.1016/j.cma.2021.113741, URL: https://linkinghub.elsevier.com/retrieve/pii/S0045782521000773.

Haywood-Alexander, M., Liu, W., Bacsa, K., Lai, Z., Chatzi, E., 2024. Discussing the spectrum of physics-enhanced machine learning; a survey on structural mechanics applications. URL: http://arxiv.org/abs/2310.20425, arXiv:2310.20425 [cs].

He, K., Zhang, X., Ren, S., Sun, J., 2016. Deep residual learning for image recognition. In: Proceedings of the IEEE Conference on Computer Vision and Pattern Recognition. pp. 770–778.

Hollerbach, J., Khalil, W., Gautier, M., 2016. Model identification. In: Springer Handbook of Robotics. pp. 113–138.

Hornik, K., Stinchcombe, M., White, H., 1989. Multilayer feedforward networks are universal approximators. Neural Netw. 2, 359–366.

Jategaonkar, R.V., 2006. Flight Vehicle System Identification: A Time Domain Methodology. American Institute of Aeronautics and Astronautics.

Kaheman, K., Kaiser, E., Strom, B., Kutz, J.N., Brunton, S.L., 2019. Learning discrepancy models from experimental data. URL: http://arxiv.org/abs/1909.08574, arXiv:1909.08574 [cs, eess, stat].

Khalil, W., Bennis, F., 1995. Symbolic calculation of the base inertial parameters of closed-loop robots. Int. J. Robot. Res. 14, 112–128.

Khalil, W., Dombre, E., 2002. Modeling Identification and Control of Robots. CRC Press.

Khalil, W., Kleinfinger, J., 1986. A new geometric notation for open and closed-loop robots. In: Proceedings of the IEEE International Conference on Robotics and Automation. Vol. 3, pp. 1174–1179.

Lawal, Z.K., Yassin, H., Lai, D.T.C., Che Idris, A., 2022. Physics-informed neural network (PINN) evolution and beyond: A systematic literature review and bibliometric analysis. Big Data Cogn. Comput. 6, 140. http://dx.doi.org/10.3390/bdcc6040140, URL: https://www.mdpi.com/2504-2289/6/4/140.

Lee, T., Kwon, J., Wensing, P.M., Park, F.C., 2024. Robot model identification and learning: A modern perspective. Annu. Rev. Control. Robot. Auton. Syst. 7, 311–334. http://dx.doi.org/10.1146/annurev-control-061523-102310, URL: https://www.annualreviews.org/content/journals/10.1146/annurev-control-061523-102310.

Maes, P., Samin, J., Willems, P., 1989. Linearity of multibody systems with respect to barycentric parameters: Dynamics and identification models obtained by symbolic generation. Mech. Struct. Mach. 17, 219–237.

Morelli, E.A., Klein, V., 2016. Aircraft System Identification: Theory and Practice Volume 2. Sunflyte Enterprises, Williamsburg, VA.

Olsen, M.M., Petersen, H.G., 2001. A new method for estimating parameters of a dynamic robot model. Trans. Robot. Autom. 17, 95–100.

Olsson, H., Åström, K.J., De Wit, C.C., Gäfvert, M., Lischinsky, P., 1998. Friction models and friction compensation. Eur. J. Control 4, 176–195.

Paszke, A., Gross, S., Chintala, S., Chanan, G., Yang, E., DeVito, Z., Lin, Z., Desmaison, A., Antiga, L., Lerer, A., 2017. Automatic differentiation in pytorch.

Paszke, A., Gross, S., Massa, F., Lerer, A., Bradbury, J., Chanan, G., Killeen, T., Lin, Z., Gimelshein, N., Antiga, L., Desmaison, A., Kopf, A., Yang, E., DeVito, Z., Raison, M., Tejani, A., Chilamkurthy, S., Steiner, B., Fang, L., Bai, J., Chintala, S., 2019. Pytorch: An imperative style, high-performance deep learning library. In: Wallach, H., Larochelle, H., Beygelzimer, A., d'Alché Buc, F., Fox, E., Garnett, R. (Eds.), Advances in Neural Information Processing Systems. Vol. 32, Curran Associates, Inc., pp. 8024–8035, URL: http://papers.neurips.cc/paper/9015-pytorch-an-imperative-style-high-performance-deep-learning-library.pdf.

Peng, J.-Z., Hua, Y., Aubry, N., Chen, Z.-H., Mei, M., Wu, W.-T., 2024. Data and physics-driven modeling for fluid flow with a physics-informed graph convolutional neural network. Ocean Eng. 301, 117551. http://dx.doi.org/10.1016/j.oceaneng.2024.117551, URL: https://linkinghub.elsevier.com/retrieve/pii/S0029801824008886.

Plaza, A., Iriarte, X., Castellano-Aldave, C., Carlosena, A., 2024. Comprehensive characterisation of a low-frequency-vibration energy harvester. Sensors 24, http://dx.doi.org/10.3390/s24123813, URL: https://www.mdpi.com/1424-8220/24/12/3813.

Presse, C., Gautier, M., 1993. New criteria of exciting trajectories for robot identification. In: Proceedings of the IEEE International Conference on Robotics and Automation. pp. 907–912.

Raissi, M., Perdikaris, P., Karniadakis, G., 2019. Physics-informed neural networks: A deep learning framework for solving forward and inverse problems involving nonlinear partial differential equations. J. Comput. Phys. 378, 686–707. http://dx.doi.org/10.1016/j.jcp.2018.10.045, URL: https://linkinghub.elsevier.com/retrieve/pii/S0021999118307125.

Rajendra, P., Brahmajirao, V., 2020. Modeling of dynamical systems through deep learning. Biophys. Rev. 12, 1311–1320. http://dx.doi.org/10.1007/s12551-020-00776-4, URL: http://link.springer.com/10.1007/s12551-020-00776-4.

Ros, J., Iriarte, X., Mata, V., 2012. 3D inertia transfer concept and symbolic determination of the base inertial parameters. Mech. Mach. Theory 49, 284–297.

Sheu, S., Walker, M., 1991. Identifying the independent inertial parameter space of robot manipulators. Int. J. Robot. Res. 10, 668–683.

Sun, Y., Hollerbach, J.M., 2008. Observability index selection for robot calibration. In: Proceedings of the IEEE International Conference on Robotics and Automation. pp. 831–836.

Swevers, J., Ganseman, C., De Schutter, J., Van Brussel, H., 1996. Experimental robot identification using optimised periodic trajectories. Mech. Syst. Signal Process. 9, 165–184.

Swevers, J., Ganseman, C., Tükel, D.B., De Schutter, J., Van Brussel, H., 1997. Optimal robot excitation and identification. Trans. Robot. Autom. 13, 730–740.

Tutunji, T.A., 2016. Parametric system identification using neural networks. Appl. Soft Comput. 47, 251–261. http://dx.doi.org/10.1016/j.asoc.2016.05.012, URL: https://linkinghub.elsevier.com/retrieve/pii/S1568494616302137.

Walter, E., Pronzato, L., 1997. Identification of Parametric Models from Experimental Data. Springer-Verlag, New York.

Wohlleben, M., Bender, A., Peitz, S., Sextro, W., 2022. Development of a Hybrid modeling methodology for oscillating systems with friction. In: Nicosia, G., Ojha, V., La Malfa, E., La Malfa, G., Jansen, G., Pardalos, P.M., Giuffrida, G., Umeton, R. (Eds.), Machine Learning, Optimization, and Data Science. Springer International Publishing, Cham, pp. 101–115. http://dx.doi.org/10.1007/978-3-030-95470-3_8.

Yang, X., Zhou, Z., Li, L., Zhang, X., 2023. Collaborative robot dynamics with physical human–robot interaction and parameter identification wiht PINN. Mech. Mach. Theory 189, 105439. http://dx.doi.org/10.1016/j.mechmachtheory.2023.105439, URL: https://www.sciencedirect.com/science/article/pii/S0094114X23002100.

Zaparoli Cunha, B., Droz, C., Zine, A.-M., Foulard, S., Ichchou, M., 2023. A review of machine learning methods applied to structural dynamics and vibroacoustic. Mech. Syst. Signal Process. 200, 110535. http://dx.doi.org/10.1016/j.ymssp.2023.110535, URL: https://linkinghub.elsevier.com/retrieve/pii/S0888327023004430. publisher: Elsevier BV.