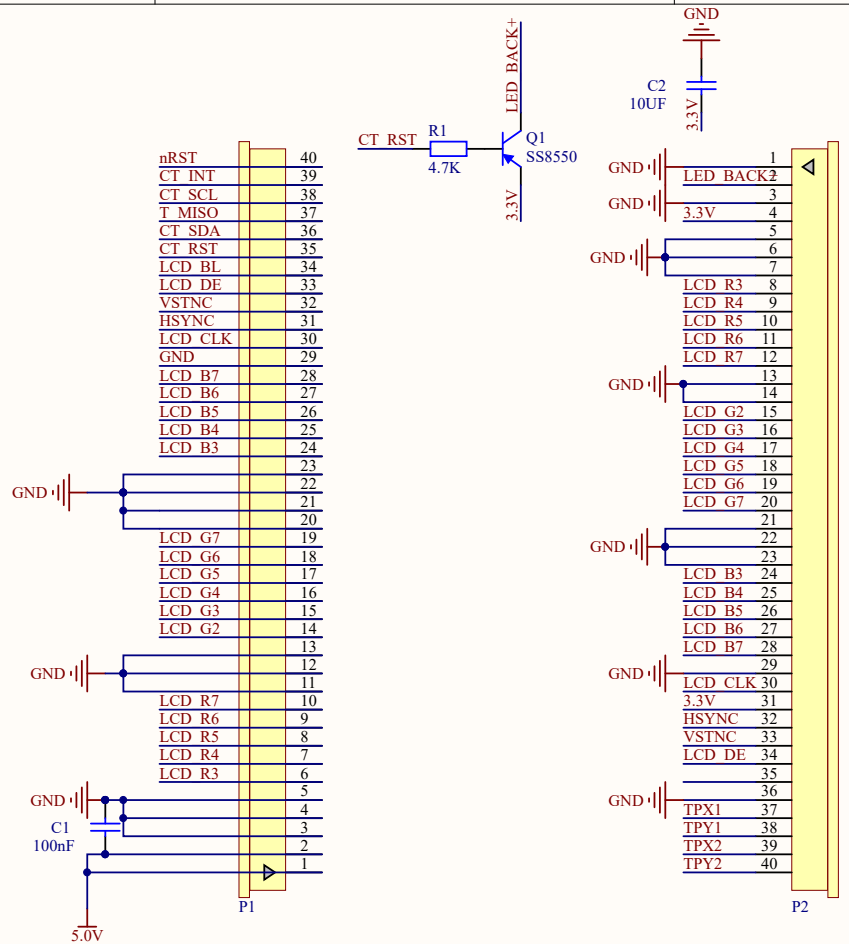

Title		
Size A4	Number	Revision
Date: 2019-04-09		Sheet of
File: I:\U盘重要数据备份\..\Sheet1.SchDoc		Drawn By: