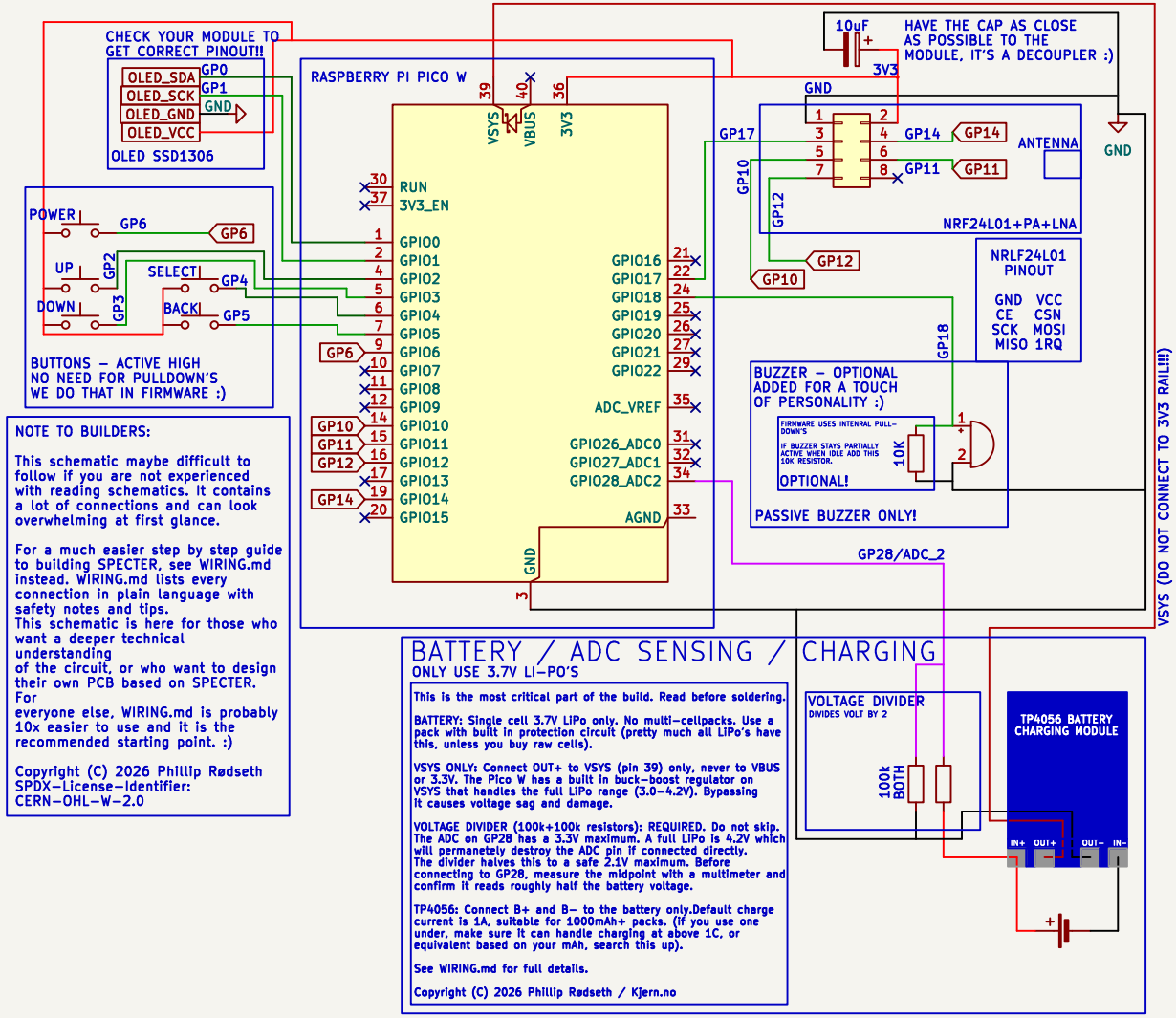

NOTE TO BUILDERS:

This schematic maybe difficult to follow if you are not experienced with reading schematics. It contains a lot of connections and can look overwhelming at first glance.

For a much easier step by step guide to building SPECTER, see WIRING.md instead. WIRING.md lists every connection in plain language with safety notes and tips.
This schematic is here for those who want a deeper technical understanding
of the circuit, or who want to design their own PCB based on SPECTER.
For
everyone else, WIRING.md is probably 10x easier to use and it is the recommended starting point. :)

Copyright (C) 2026 Phillip Rødseth
SPDX-License-Identifier:
CERN-OHL-W-2.0

This is the most critical part of the build. Read before soldering.

BATTERY: Single cell 3.7V LiPo only. No multi-cellpacks. Use a pack with built in protection circuit (pretty much all LiPo's have this, unless you buy raw cells).

VSYS ONLY: Connect OUT+ to VSYS (pin 39) only, never to VBUS or 3.3V. The Pico W has a built in buck-boost regulator on VSYS that handles the full LiPo range (3.0–4.2V). Bypassing it causes voltage sag and damage.

VOLTAGE DIVIDER (100k+100k resistors): REQUIRED. Do not skip. The ADC on GP28 has a 3.3V maximum. A full LiPo is 4.2V which will permanetely destroy the ADC pin if connected directly. The divider halves this to a safe 2.1V maximum. Before connecting to GP28, measure the midpoint with a multimeter and confirm it reads roughly half the battery voltage.

TP4056: Connect B+ and B- to the battery only.Default charge current is 1A, suitable for 1000mAh+ packs. (If you use one under, make sure it can handle charging at above 1C, or equivalent based on your mAh, search this up).

See WIRING.md for full details.

Copyright (C) 2026 Phillip Rødseth / Kjern.no