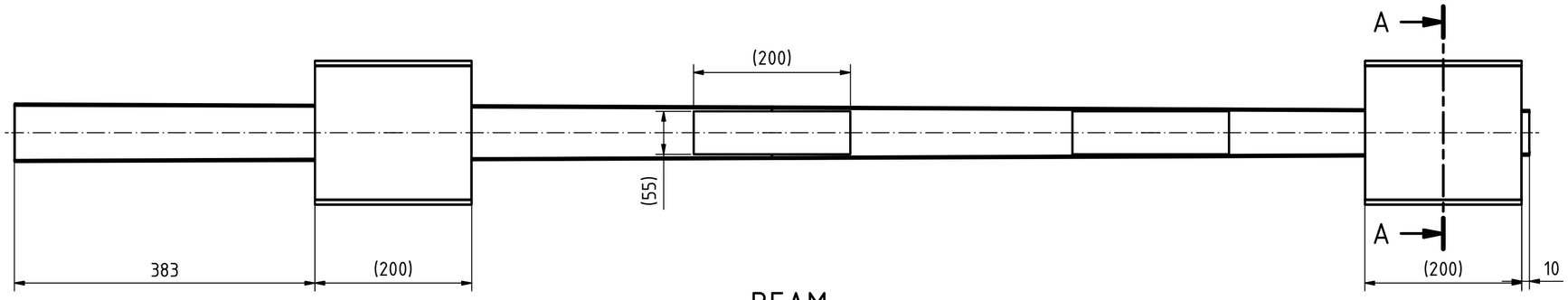

BEAM

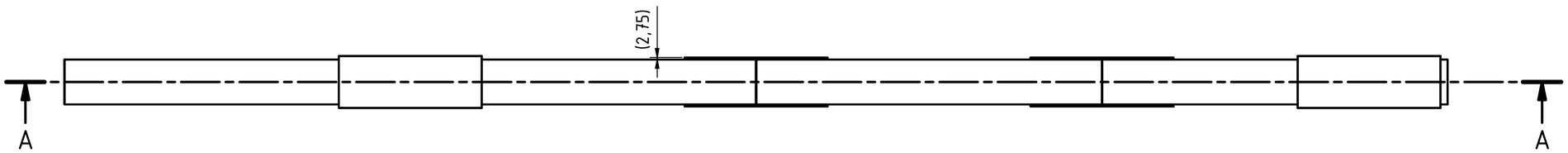

A-A (1 : 2)

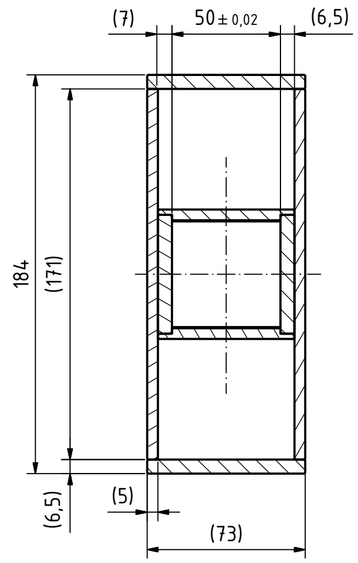

A-A

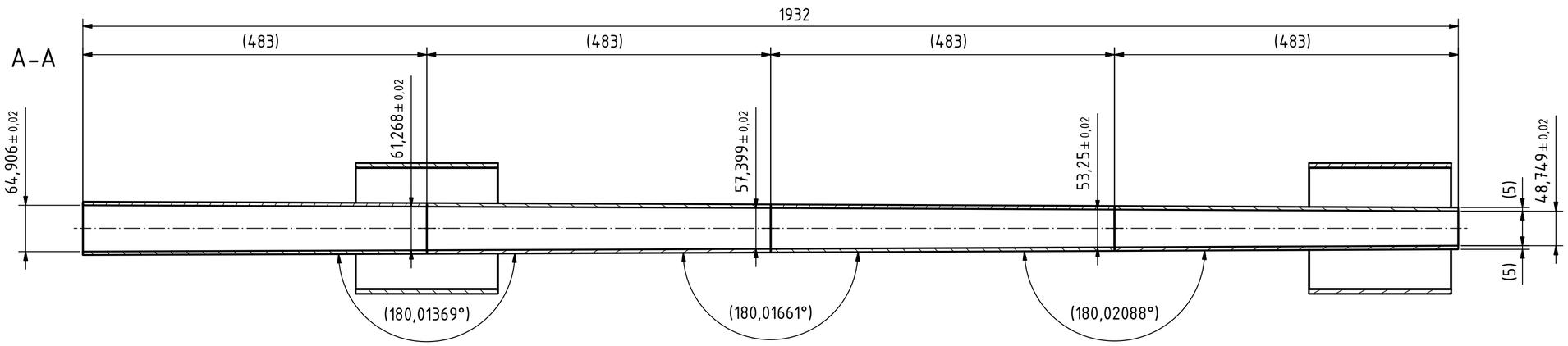

Truly curved parabolic guide

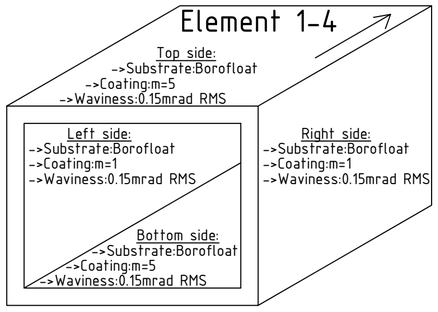

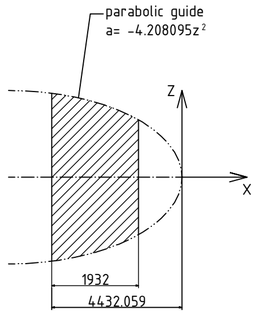

Scratch-marks:
horizontal & vertical
scratch-marks on ng-unit
entrance and exit front faces

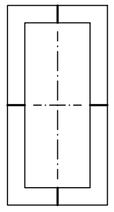

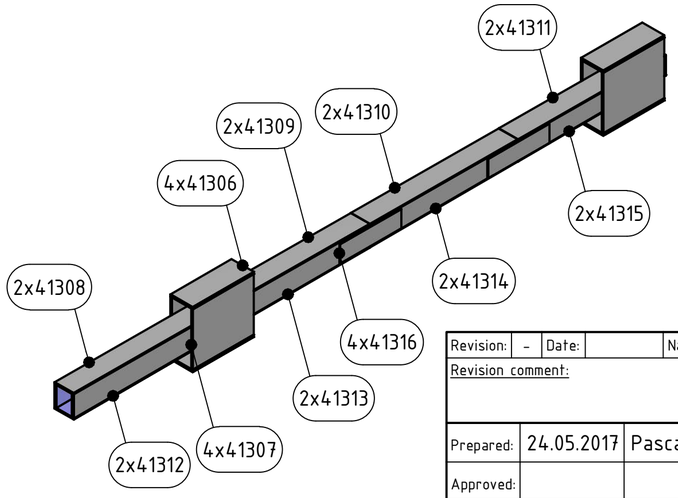

~~03~~	~~Testpressure: < 5x10^{-2} mbar~~ ~~Max. leakrate: 1x10^{-7} mbar*l/s~~
02	General tolerances ISO 2768-mK
01	All dimensions are in millimeter
No.	Notes

Revision: -	Date:	Name:	SN16070 NERA focusing guide
Revision comment:			DUBNA
Prepared: 24.05.2017	Pascal Baumgartner		Dimensions ISO 14405 Ⓔ / Dimensions = mm
Approved:			8,4 kg / A2 1 /1
SwissNeutronics	41274- Unit-12.idw		