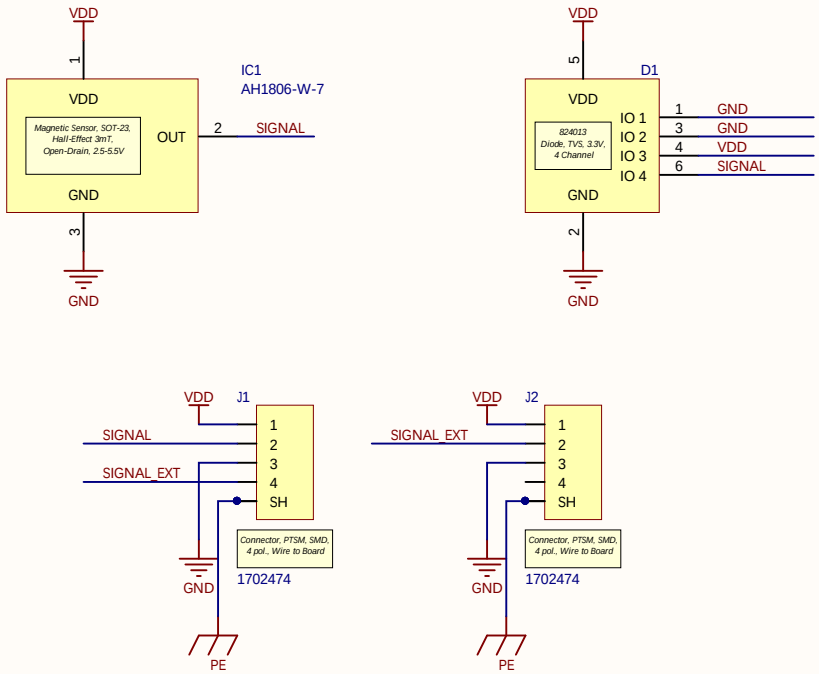

Title	*Bicycle Gauge Magnetic Switch*		Drawn by: *Sven Möller* Approved by: *-*
Size: *A4*		Revision: *v1.0*	*Private* *-* *-*
Date: *19.05.2019*	Time: *10:40:03*	Sheet *1* of *1*	
File: *Main.SchDoc*			