Sensor node power supply and communication PCB part schematic

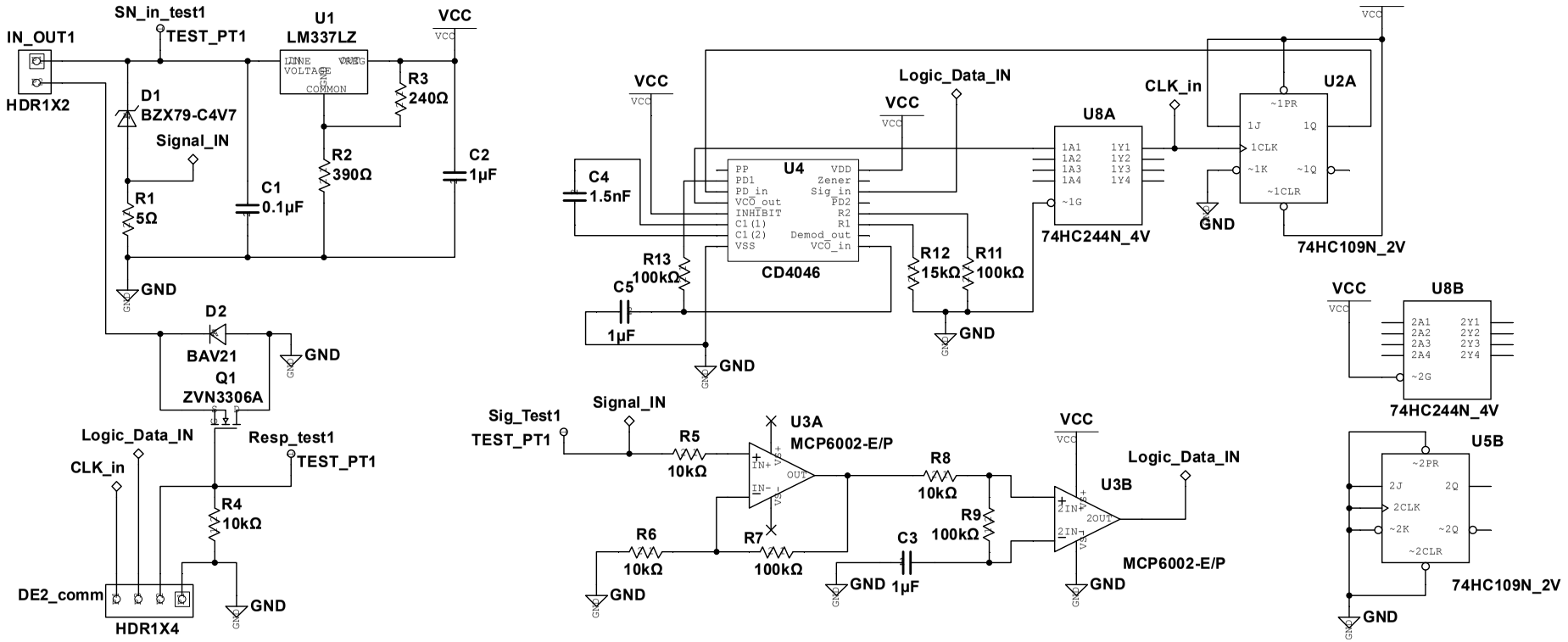

Sensor node data acquisition PCB part schematic

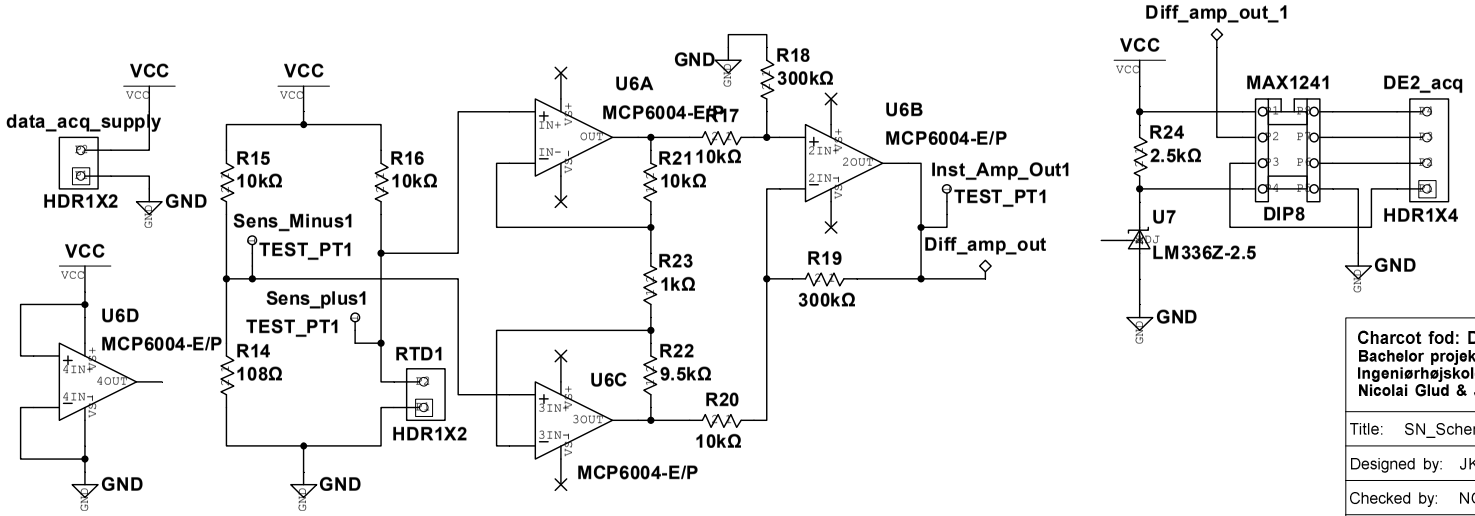

Charcot fod: Design og udvikling af temperatur-måle-device.
Bachelor projekt nr: 14030
Ingeniørhøjskolen Århus
Nicolai Glud & Johnny Kristensen

Title: SN_Schematic	Desc.: Sensor node complete schematic	
Designed by: JK	Document No: 1	Revision: 6
Checked by: NG	Date: 30-05-2014	Size: A3
Approved by:	Sheet 1 of 1	