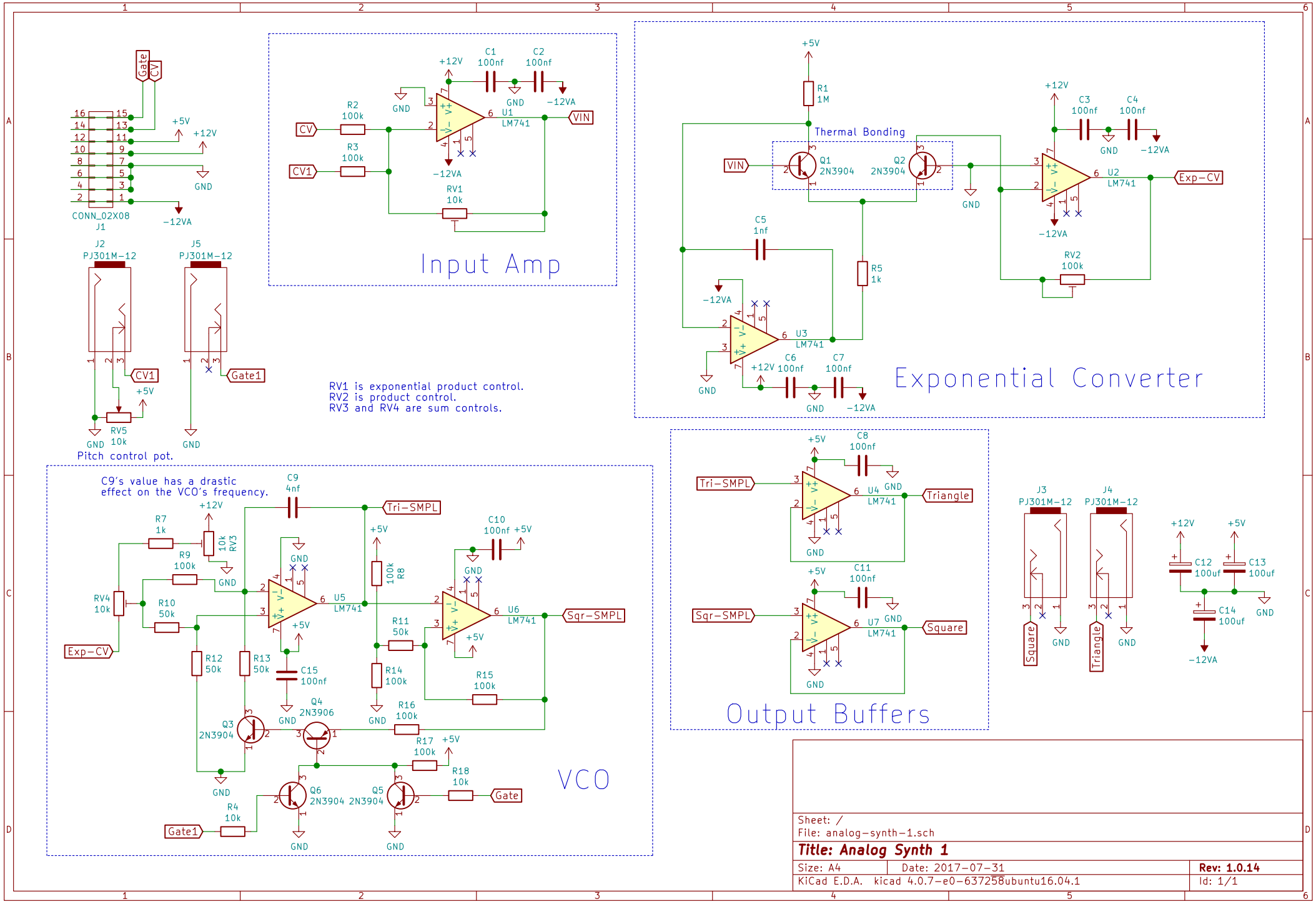
Gate
CV
CONN_02X08
J1
+5V
+12V
GND
-12VA
J2
PJ301M-12
J5
PJ301M-12
CV1
Gate1
RV5
10k
Pitch control pot.
Input Amp
C1
100nf
C2
100nf
R2
100k
R3
100k
RV1
10k
U1
LM741
VIN
Exponential Converter
R1
1M
Thermal Bonding
Q1
2N3904
Q2
2N3904
C3
100nf
C4
100nf
U2
LM741
Exp-CV
RV2
100k
C5
1nf
R5
1k
U3
LM741
C6
100nf
C7
100nf
RV1 is exponential product control.
RV2 is product control.
RV3 and RV4 are sum controls.
C9's value has a drastic
effect on the VCO's frequency.
C9
4nf
Tri-SMPL
R7
1k
10k
RV3
R9
100k
RV4
10k
R10
50k
Exp-CV
R12
50k
R13
50k
C15
100nf
U5
LM741
100k
R8
C10
100nf
U6
LM741
Sqr-SMPL
R11
50k
R14
100k
R15
100k
R16
100k
Q3
2N3904
Q4
2N3906
R17
100k
R18
10k
Q6
2N3904
Q5
2N3904
Gate
R4
10k
Gate1
VCO
C8
100nf
U4
LM741
Triangle
C11
100nf
U7
LM741
Square
Output Buffers
J3
PJ301M-12
J4
PJ301M-12
C12
100uf
C13
100uf
C14
100uf
Sheet: /
File: analog-synth-1.sch
Title: Analog Synth 1
Size: A4
Date: 2017-07-31
Rev: 1.0.14
KiCad E.D.A. kicad 4.0.7-e0-637258ubuntu16.04.1
Id: 1/1