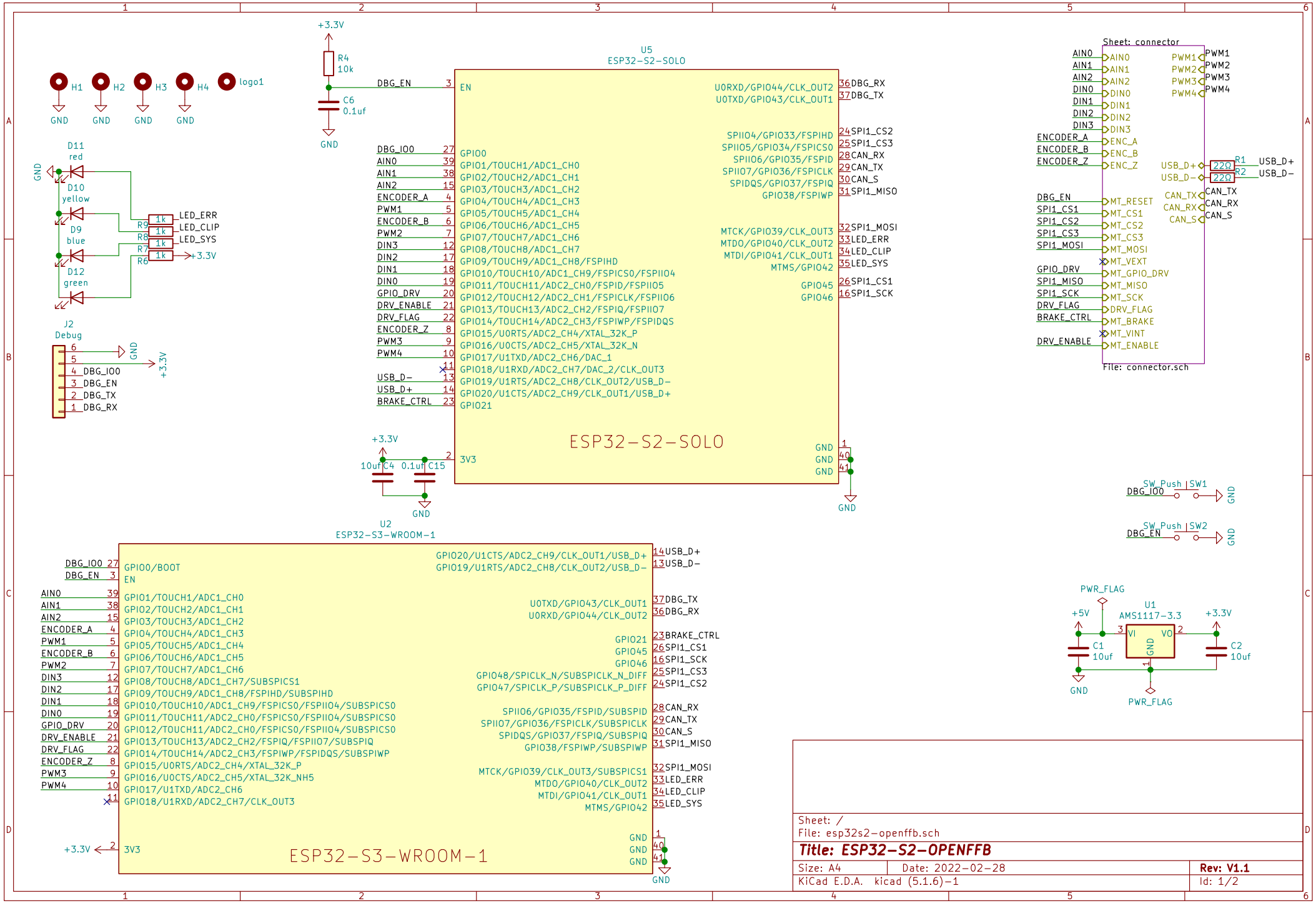
U5
ESP32-S2-SOLO
ESP32-S2-SOLO
EN
GPIO0
GPIO1/TOUCH1/ADC1_CH0
GPIO2/TOUCH2/ADC1_CH1
GPIO3/TOUCH3/ADC1_CH2
GPIO4/TOUCH4/ADC1_CH3
GPIO5/TOUCH5/ADC1_CH4
GPIO6/TOUCH6/ADC1_CH5
GPIO7/TOUCH7/ADC1_CH6
GPIO8/TOUCH8/ADC1_CH7
GPIO9/TOUCH9/ADC1_CH8/FSPIHD
GPIO10/TOUCH10/ADC1_CH9/FSPICS0/FSPII04
GPIO11/TOUCH11/ADC2_CH0/FSPID/FSPII05
GPIO12/TOUCH12/ADC2_CH1/FSPICLK/FSPII06
GPIO13/TOUCH13/ADC2_CH2/FSPIQ/FSPII07
GPIO14/TOUCH14/ADC2_CH3/FSPIWP/FSPIDQS
GPIO15/U0RTS/ADC2_CH4/XTAL_32K_P
GPIO16/U0CTS/ADC2_CH5/XTAL_32K_N
GPIO17/U1TXD/ADC2_CH6/DAC_1
GPIO18/U1RXD/ADC2_CH7/DAC_2/CLK_OUT3
GPIO19/U1RTS/ADC2_CH8/CLK_OUT2/USB_D-
GPIO20/U1CTS/ADC2_CH9/CLK_OUT1/USB_D+
GPIO21
3V3
U0RXD/GPIO44/CLK_OUT2
U0TXD/GPIO43/CLK_OUT1
SPII04/GPIO33/FSPIHD
SPII05/GPIO34/FSPICS0
SPII06/GPIO35/FSPID
SPII07/GPIO36/FSPICLK
SPIDQS/GPIO37/FSPIQ
GPIO38/FSPIWP
MTCK/GPIO39/CLK_OUT3
MTDO/GPIO40/CLK_OUT2
MTDI/GPIO41/CLK_OUT1
MTMS/GPIO42
GPIO45
GPIO46
GND
GND
GND
DBG_EN
DBG_IO0
AIN0
AIN1
AIN2
ENCODER_A
PWM1
ENCODER_B
PWM2
DIN3
DIN2
DIN1
DIN0
GPIO_DRV
DRV_ENABLE
DRV_FLAG
ENCODER_Z
PWM3
PWM4
USB_D-
USB_D+
BRAKE_CTRL
DBG_RX
DBG_TX
SPI1_CS2
SPI1_CS3
CAN_RX
CAN_TX
CAN_S
SPI1_MISO
SPI1_MOSI
LED_ERR
LED_CLIP
LED_SYS
SPI1_CS1
SPI1_SCK
+3.3V
R4
10k
C6
0.1uf
C4
10uf
C15
0.1uf
H1
H2
H3
H4
logo1
D11
red
D10
yellow
D9
blue
D12
green
R9
R8
R7
R6
1k
J2
Debug
Sheet: connector
File: connector.sch
AIN0
AIN1
AIN2
DIN0
DIN1
DIN2
DIN3
ENC_A
ENC_B
ENC_Z
MT_RESET
MT_CS1
MT_CS2
MT_CS3
MT_MOSI
MT_VEXT
MT_GPIO_DRV
MT_MISO
MT_SCK
DRV_FLAG
MT_BRAKE
MT_VINT
MT_ENABLE
PWM1
PWM2
PWM3
PWM4
USB_D+
USB_D-
CAN_TX
CAN_RX
CAN_S
R1
R2
22Ω
SW_Push
SW1
SW2
U2
ESP32-S3-WROOM-1
ESP32-S3-WROOM-1
GPIO0/BOOT
EN
GPIO1/TOUCH1/ADC1_CH0
GPIO2/TOUCH2/ADC1_CH1
GPIO3/TOUCH3/ADC1_CH2
GPIO4/TOUCH4/ADC1_CH3
GPIO5/TOUCH5/ADC1_CH4
GPIO6/TOUCH6/ADC1_CH5
GPIO7/TOUCH7/ADC1_CH6
GPIO8/TOUCH8/ADC1_CH7/SUBSPICS1
GPIO9/TOUCH9/ADC1_CH8/FSPIHD/SUBSPIHD
GPIO10/TOUCH10/ADC1_CH9/FSPICS0/FSPII04/SUBSPICS0
GPIO11/TOUCH11/ADC2_CH0/FSPICS0/FSPII04/SUBSPICS0
GPIO12/TOUCH11/ADC2_CH0/FSPICS0/FSPII04/SUBSPICS0
GPIO13/TOUCH13/ADC2_CH2/FSPIQ/FSPII07/SUBSPIQ
GPIO14/TOUCH14/ADC2_CH3/FSPIWP/FSPIDQS/SUBSPIWP
GPIO15/U0RTS/ADC2_CH4/XTAL_32K_P
GPIO16/U0CTS/ADC2_CH5/XTAL_32K_NH5
GPIO17/U1TXD/ADC2_CH6
GPIO18/U1RXD/ADC2_CH7/CLK_OUT3
3V3
GPIO20/U1CTS/ADC2_CH9/CLK_OUT1/USB_D+
GPIO19/U1RTS/ADC2_CH8/CLK_OUT2/USB_D-
U0TXD/GPIO43/CLK_OUT1
U0RXD/GPIO44/CLK_OUT2
GPIO21
GPIO45
GPIO46
GPIO48/SPICLK_N/SUBSPICLK_N_DIFF
GPIO47/SPICLK_P/SUBSPICLK_P_DIFF
SPII06/GPIO35/FSPID/SUBSPID
SPII07/GPIO36/FSPICLK/SUBSPICLK
SPIDQS/GPIO37/FSPIQ/SUBSPIQ
GPIO38/FSPIWP/SUBSPIWP
MTCK/GPIO39/CLK_OUT3/SUBSPICS1
MTDO/GPIO40/CLK_OUT2
MTDI/GPIO41/CLK_OUT1
MTMS/GPIO42
GND
GND
GND
DBG_IO0
DBG_EN
AIN0
AIN1
AIN2
ENCODER_A
PWM1
ENCODER_B
PWM2
DIN3
DIN2
DIN1
DIN0
GPIO_DRV
DRV_ENABLE
DRV_FLAG
ENCODER_Z
PWM3
PWM4
USB_D+
USB_D-
DBG_TX
DBG_RX
BRAKE_CTRL
SPI1_CS1
SPI1_CS2
SPI1_CS3
SPI1_SCK
CAN_RX
CAN_TX
CAN_S
SPI1_MISO
SPI1_MOSI
LED_ERR
LED_CLIP
LED_SYS
+3.3V
PWR_FLAG
+5V
U1
AMS1117-3.3
VI
VO
GND
C1
10uf
C2
10uf
GND
Sheet: /
File: esp32s2-openffb.sch
Title: ESP32-S2-OPENFFB
Size: A4
Date: 2022-02-28
Rev: V1.1
KiCad E.D.A. kicad (5.1.6)-1
Id: 1/2

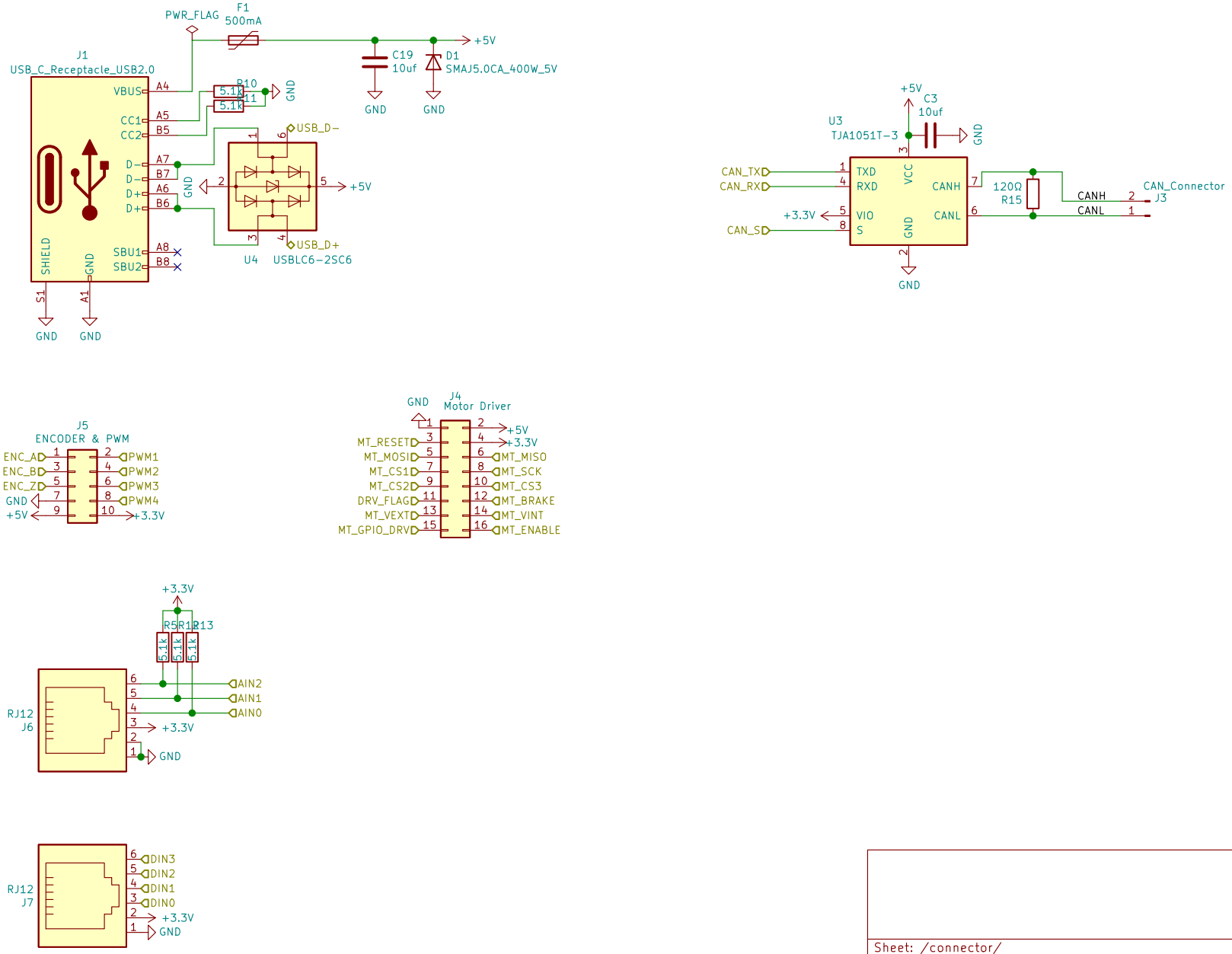

Sheet: /connector/
File: connector.sch

Title: ESP32-S2-OPENFFB

Size: A4	Date: 2022-03-15	Rev: V1.1
KiCad E.D.A. kicad (5.1.6)-1		Id: 2/2