DRG.NO.

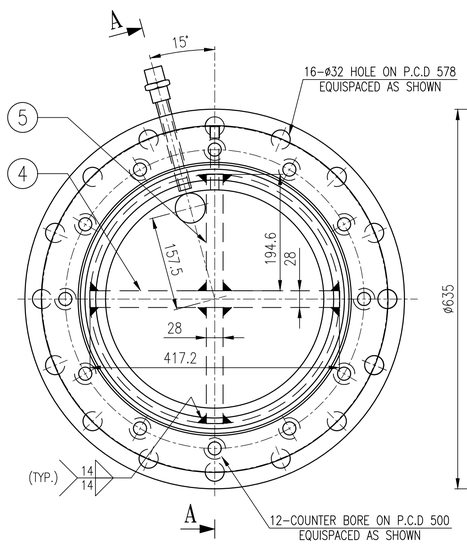

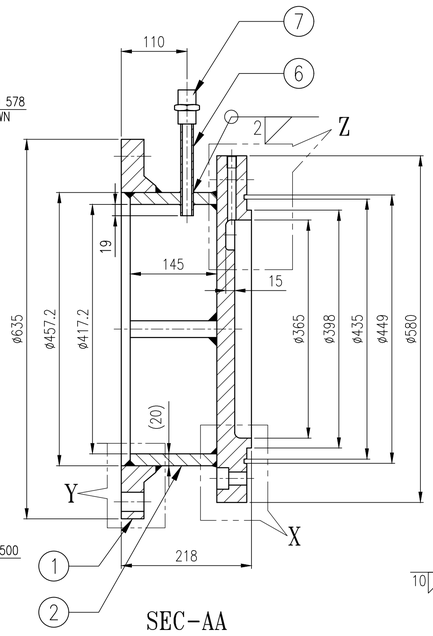

SEC-AA

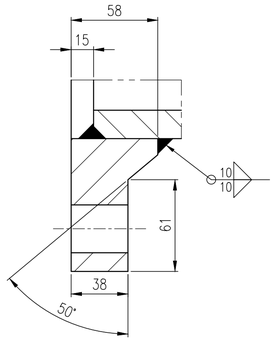

DETAIL-Y
SCALE-1:2

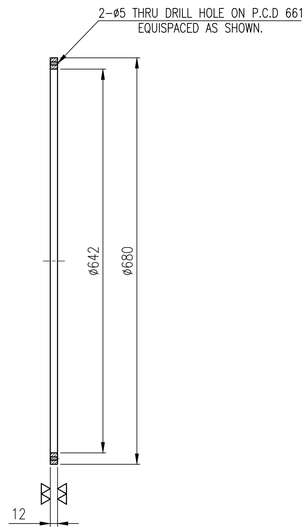

9 ▽[▽▽]

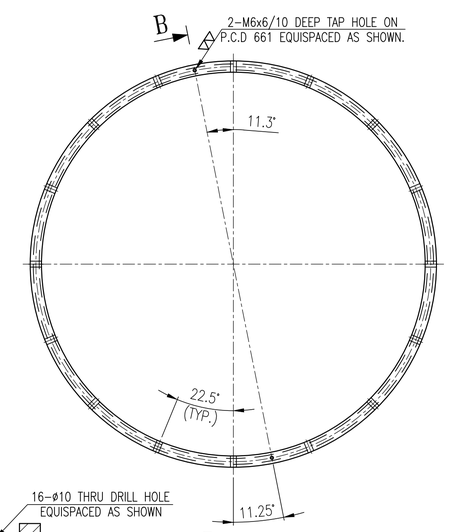

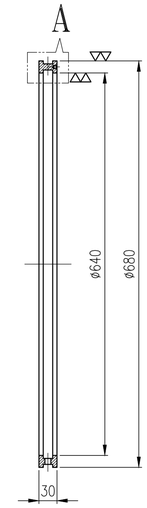

SEC-BB

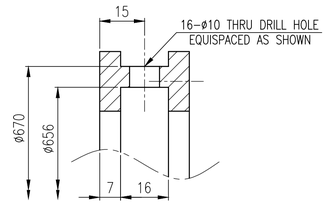

DETAIL-A
SCALE-1:2

8 ▽[▽▽]

TATA DRG. NO. 20201001961026000/B

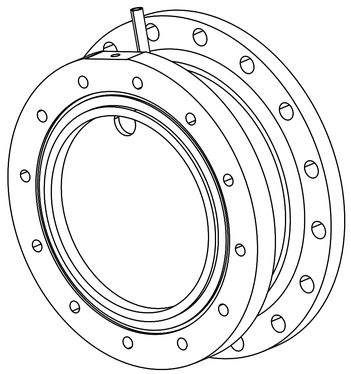

FRONT VIEW

MK-A ▽[▽▽]

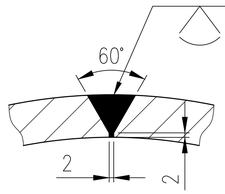

WELD DETAIL
FOR ITEM NO-2

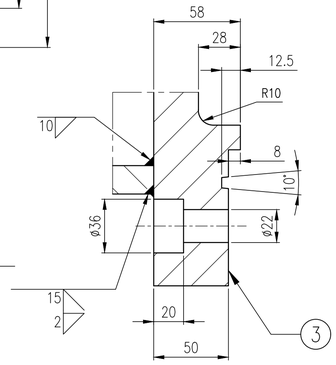

DETAIL-X
SCALE-1:2

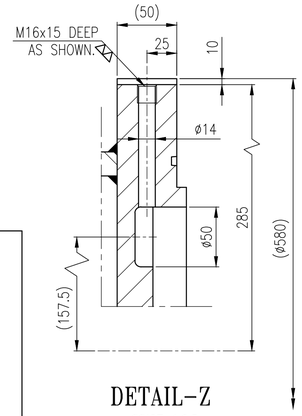

DETAIL-Z
SCALE-1:2.5

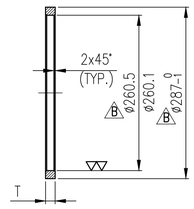

10 ▽[▽▽]

MAT. SPEC.- B

SL. NO.	T	WT. IN KG
1	16	1.18
2	17	1.25

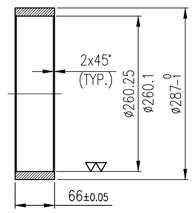

13 ▽[▽▽] B

MAT. SPEC.-

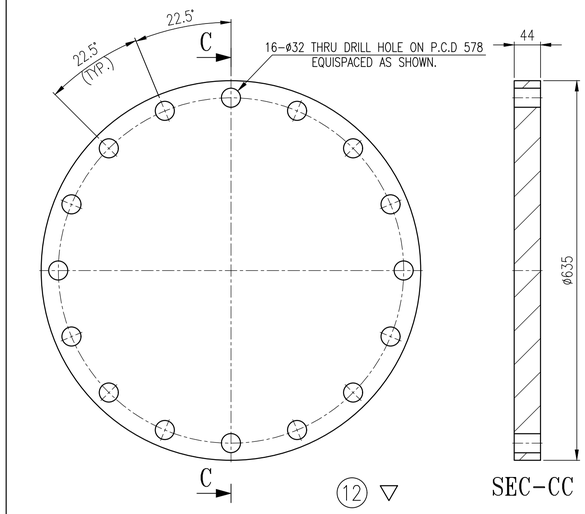

12 ▽

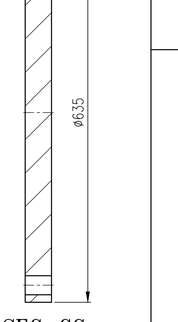

SEC-CC

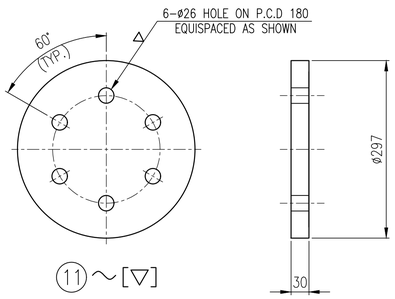

11 ~[▽]

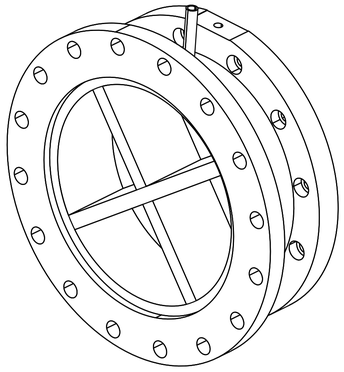

BACK VIEW

NOTES:-

1) ROUND-OFF ALL SHARP EDGES/CORNERS.
2) ALL WELD JOINTS ARE U.T & D.P, U.O.N.
3) ALL WELDING SHALL CONFORM TO IS:9595.
4) ALL FABRICATION SHALL CONFORM TO IS:7215.
5) SHOP PAINT AFTER FABRICATION STRICTLY FOLLOWING TISCO STD. # 09012/2-ITEM 3a APPENDIX C.

ASSLY. MK.	ITEM No.	DESCRIPTION.	MATERIAL.	No. RQD.	UNIT WT. IN KG.	TOTAL WT. IN KG.	REMARKS
	13	BEARING SPACER	Fe.490B IS:8500	1	4.85	4.85	
	12	END PLATE	Fe.490B IS:8500	1	6.39	6.39	
	11	BEARING END PLATE	Fe.490B IS:8500	1	15.57	15.57	
	10	BEARING SPACER	Fe.490B IS:8500	1			
	9	PACKING SPACER	Fe.490B IS:8500	1	3.72	3.72	
	8	OUTER LANTERN RING	Fe.490B IS:8500	1	7.06	7.06	
	7	SOCKET UNION DN15, AS PER IS:1239	AISI 304	1			
	6	SEAMLESS TUBE O.D 21.3 X 2.6 X 153.5, IS:3601	AISI 304	1	0.20	0.20	
	5	PL 28 THK X 145 X 195	Fe.490B IS:8500	2	6.22	12.44	CUT TO SHAPE
	4	PL 28 THK X 145 X 418	Fe.490B IS:8500	1	13.32	13.32	CUT TO SHAPE
	3	FLANGE-2	Fe.490B IS:8500	1	82.52	82.52	
	2	PL 20 THK X 145 X 1377	Fe.490B IS:8500	1	31.35	31.35	BEND TO SHAPE
	1	FLANGE-1	Fe.490B IS:8500	1	47.03	47.03	
A		END CAP ASSLY.		1		–	–

BILL OF MATERIAL

REV. MK.	REVISIONS	JOB. NO.	BY DATE	CHKD.	APP.	NOTES	DRG. No.	REFERENCE
B	DRAWING REVISED AS MARKED		25.07.18	S.KANRAR				FIELD DIMENSION

FIRST ANGLE PROJECTION

SHEET SIZE- A1

SCALE 1:5

DRN. T.K.MAHATO

CHKD. S.KANRAR

APPROVED.

DRG. DEVELOPED BY:- M/S. CADPROFESSIONALS, JSR.-1

TATA STEEL LIMITED, KALINGANAGAR

DEPT. BLAST FURNACE

SUB DIVN. RASA-1 SCREW CONVEYOR

DETAIL SPARE PARTS (FOR SUBMERSIBLE BEARING HOUSING)

DRG. NO. MED-M-KP0-A1-464 REV. B

DEVIATIONS FOR UNTOLERANCED DIMENSIONS:-IS:2102 (MEDIUM)

ROUGHNESS SYMBOL	ROUGHNESS GRADE NO. IS: 3073	ROUGHNESS VALUE IN MICRONS. Ra/µm(MAX)
~	N12	50
▽	N11	25
▽▽	N9	6.3
▽▽▽	N8	0.8
▽▽▽▽	N5	0.1

DRG. NO REV

DO NOT SCALE

IF IN DOUBT , ASK M E D DESIGN

This drawing concepts, ideas associated are properties of Tata Steel Limited. Unauthorized usage, reproduction or distribution in any form is strictly prohibited