DRG.NO. K-1-180398

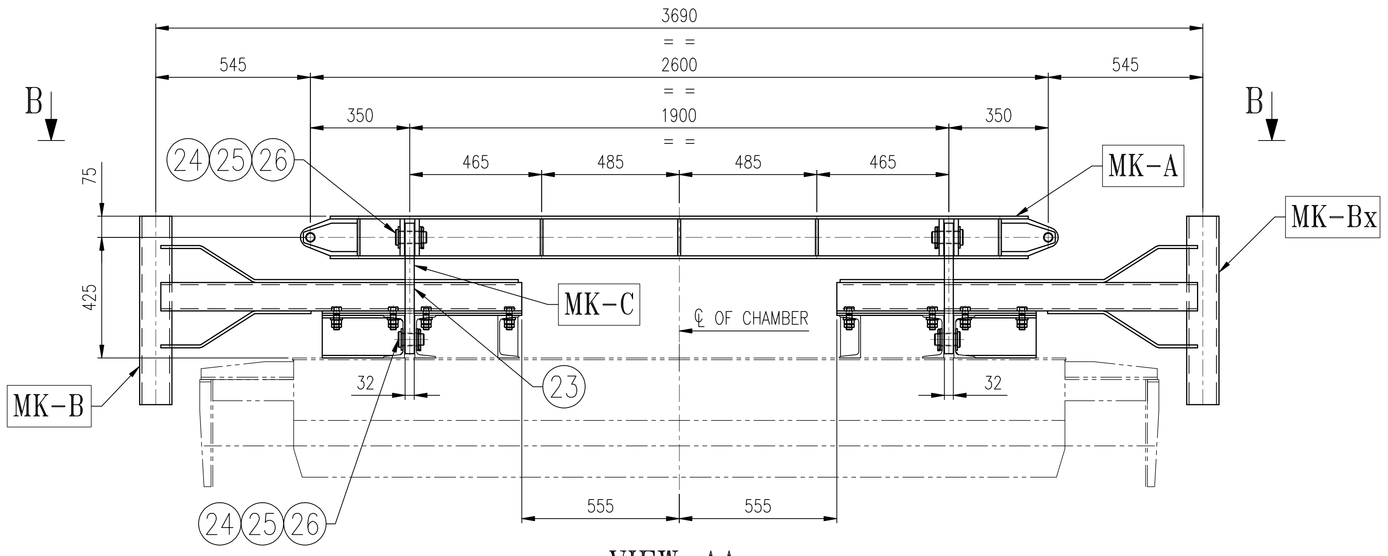

VIEW-AA

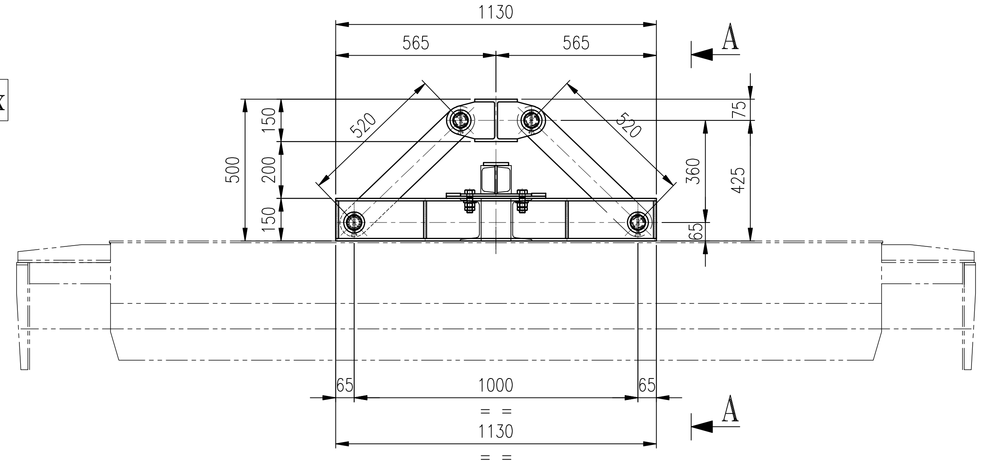

ASSEMBLY OF HANGER ARM MK-C
(FOR TOP COVER OF CHARGING FACILITY)

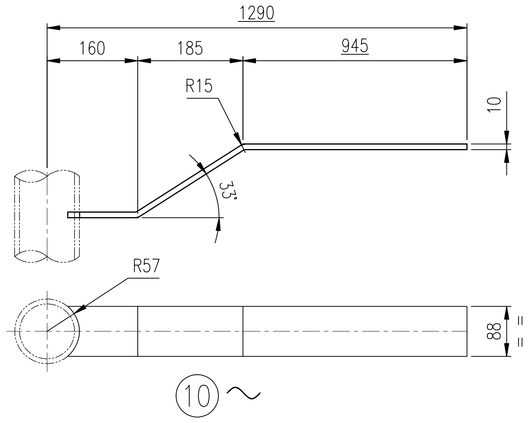

10 ~

MAT. SPEC.- Fe.410WB, IS:2062
CUT & WELD

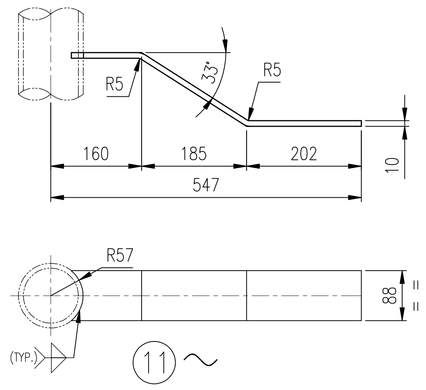

11 ~

MAT. SPEC.- Fe.410WB, IS:2062
CUT & WELD

NOTES:-
1) ROUND-OFF ALL SHARP EDGES/CORNERS.
2) SHADED TRIANGLE INDICATES MACHINING AFTER FABRICATION/STRESS-RELIEVING.
3) STRESS RELIEVE AFTER COMPLETE FABRICATION PRIOR TO MACHINING.
4) ALL WELD JOINTS ARE 6mm FILLET CONTINUOUS, U.O.N.
5) ALL WELDING SHALL CONFORM TO IS:9595.
6) ALL FABRICATION SHALL CONFORM TO IS:7215.
7) SHOP PAINT AFTER FABRICATION.

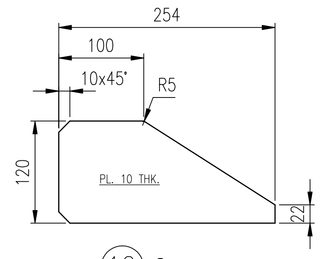

12 ~

MAT. SPEC.- Fe.410WB, IS:2062
CUT & WELD

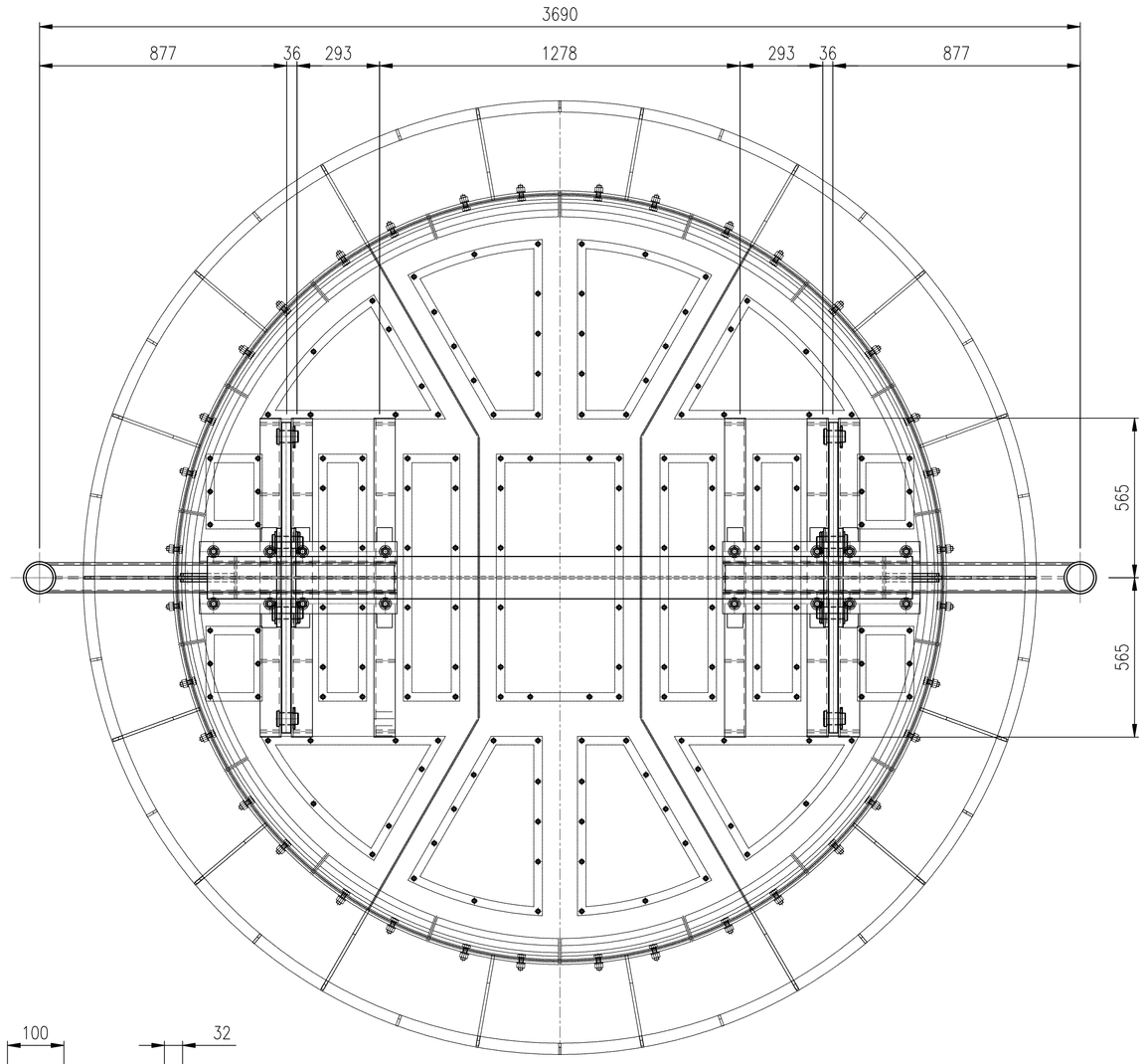

TOP PLAN-BB

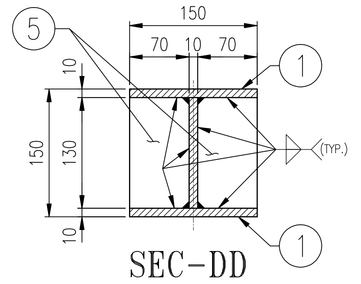

SEC-DD

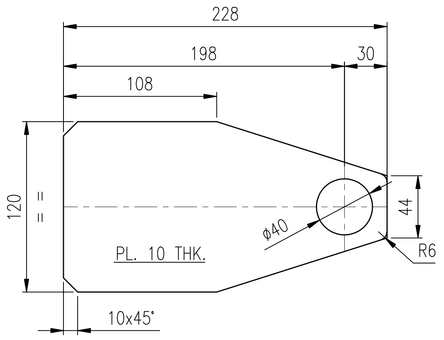

3 ~ [▽]

MAT. SPEC.- Fe.410WB, IS:2062
CUT & WELD

TATA DRG. NO:-10251001961000024/A

READ THIS DRAWING IN CONJUNCTION WITH
DRG. NO. K-2-180398 SHT. 5 OF 8

TOTAL WEIGHT = 554.26 KGS

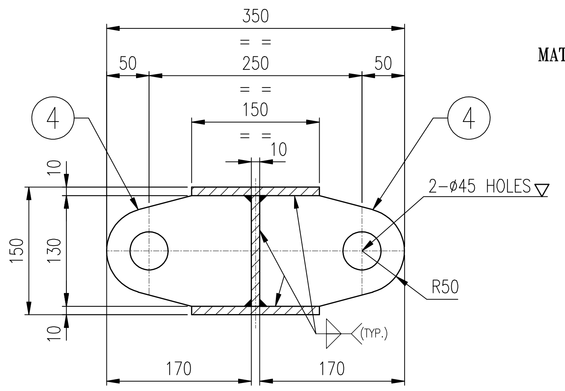

SEC-EE

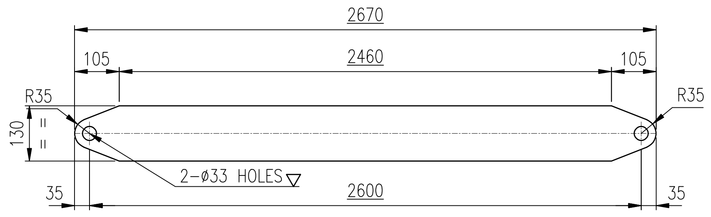

2 ~ [▽]

MAT. SPEC.- Fe.410WB, IS:2062
CUT & WELD

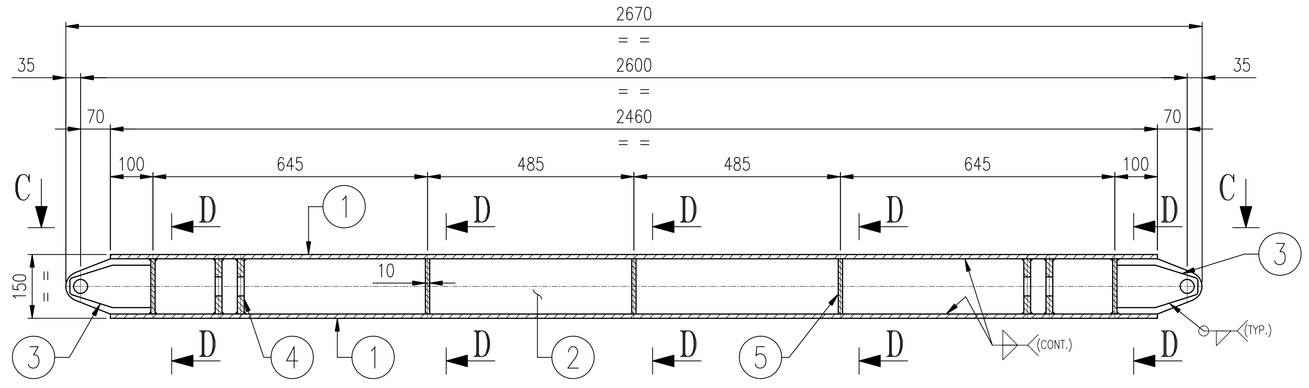

MK-A

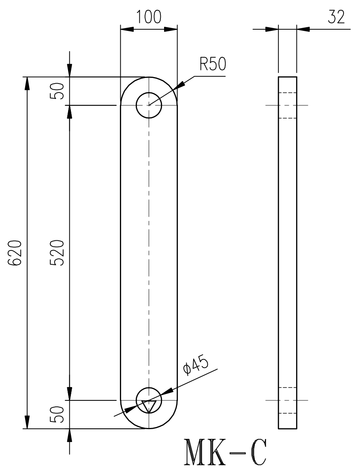

MK-C

23 ~ [▽]

MAT. SPEC.- Fe.410WB, IS:2062
CUT & WELD

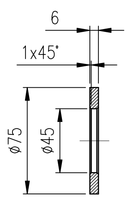

25 ▽

MAT. SPEC.- Fe.410WB, IS:2062
CUT & WELD

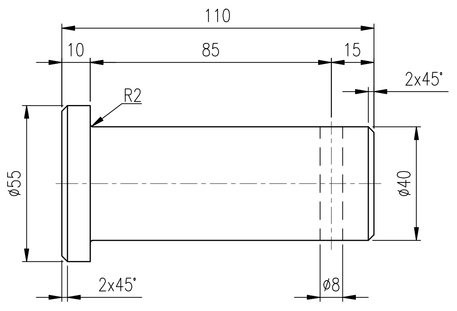

24 ▽▽

MAT. SPEC.- 45C8, IS:2004
CUT & MACHINE

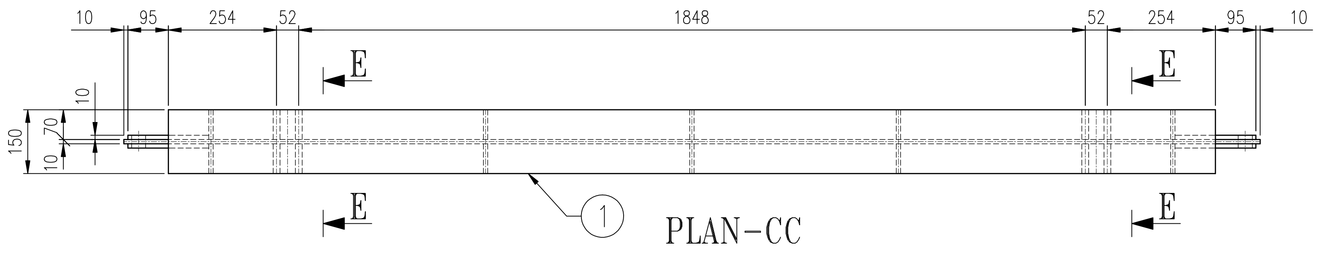

PLAN-CC

ASSLY. MK.	ITEM No.	DESCRIPTION.	MATERIAL.	No. RQD.	UNIT WT. IN KG.	TOTAL WT. IN KG.	REMARKS
	26	SPLIT COTTER PIN 8 X 80, IS:549	IS:8563	8			PURCHASE
	25	WASHER ø75 x 6 THK.	SS:400	8	0.15	1.20	PURCHASE
	24	PIN ø 55 x 110	SS:400	8	2.12	16.96	
	23	PL. 32 THK. x 100 x 620	SS:400	4	15.57	62.28	
MK.-C		ARM	ASSEMBLY	1	80.44	80.44	
	22	TAPER WASHER 20A IS:6649	SS:400	8	0.017	0.136	PURCHASE
	21	HEX. LOCK NUT M20 IS:1369 P-10.9	P-10.9 IS:1367	8	0.04	0.32	PURCHASE
	20	HEX. NUT M20 IS:1369 P-10.9	P-10.9 IS:1367	8	0.06	0.48	PURCHASE
	19	HEX. BOLT M20 x 80 IS:1369 P-10.9	P-10.9 IS:1367	8	0.26	2.08	PURCHASE
	18	PIPE O/D 114.3 x 8.56 THK. x 665	SS:400	1	14.84	14.84	
	17	PL. 10 THK. x 100 x 1270	SS:400	1	9.96	9.96	
	16	PL. 10 THK. x 65 x 138	SS:400	18	0.70	12.60	
	15	PL. 12 THK. x 40 x 55	SS:400	8	0.20	1.60	
	14	PL. 10 THK. x 250 x 703	SS:400	1	17.79	17.79	
	13	PL. 10 THK. x 350 x 703	SS:400	1	19.31	19.31	
	12	PL. 10 THK. x 120 x 254	SS:400	2	2.39	4.78	
	11	PL. 10 THK. x 88 x 537 (ABT.)	SS:400	1	3.70	3.70	
	10	PL. 10 THK. x 88 x 1286 (ABT.)	SS:400	1	8.88	8.88	
	9	ISMC. 100 x 50 x 1272	SS:400	1	12.16	12.16	
	8	ISMC. 150 x 75 x 284	SS:400	2	4.77	9.54	
	7	ISMC. 150 x 75 x 1130	SS:400	1	18.98	18.98	
	6	ISMC. 150 x 75 x 1130	SS:400	2	18.98	37.96	
MK-B		SLIDE BRACKET	ASSEMBLY	2	175.12	350.24	
	5	PL. 10 THK. x 70 x 130	SS:400	10	0.71	7.10	
	4	PL. 10 THK. x 130 x 170	SS:400	8	1.73	13.84	
	3	PL. 10 THK. x 120 x 228	SS:400	4	2.14	8.56	
	2	PL. 10 THK. x 130 x 2670	SS:400	1	27.42	27.42	
	1	PL. 10 THK. x 150 x 2460	SS:400	2	28.96	57.92	
MK-A		HANGER	ASSEMBLY	1	114.84	114.84	

BILL OF MATERIAL

REV. MK.	REVISIONS	JOB. NO.	BY DATE	CHKD.	APP.	NOTES	DRG. No.	REFERENCE
-	-	-				-	-	-

FIRST ANGLE PROJECTION

SHEET SIZE- A1

SCALE 1:15

DRN.	DATE
R.G	06.10.18
CHKD.	DATE
T.K.M	16.11.18
APPROVED	DATE
S.KANRAR	16.11.18

DRG. DEVELOPED BY:- M/S. CAD PROFESSIONALS

TATA STEEL LIMITED, KALINGANAGAR

DEPT. COKE PLANT

SUB DIVN. CDQ

DETAIL HANGER BRACKET & ARM ASSLY.
(FOR HOT COKE CHARGING FACILITY)

DEVIATIONS FOR UNTOLERANCED DIMENSIONS:-IS:2102 (MEDIUM)

ROUGHNESS SYMBOL	ROUGHNESS GRADE NO. IS: 3073	ROUGHNESS VALUE IN MICRONS Ra(µm)(MAX)
~	N12	50
▽	N11	25
▽▽	N9	6.3
▽▽▽	N6	0.8
▽▽▽▽	N3	0.1

DRG. NO K-1-180398 REV. A

SHEET. NO. 4 OF 8

1 2 3 4 IF IN DOUBT , ASK M E D DESIGN 6

DO NOT SCALE

This drawing concepts, ideas associated are properties of Tata Steel Limited. Unauthorized usage, reproduction or distribution in any form is strictly prohibited

DRG.NO. K-2-180398

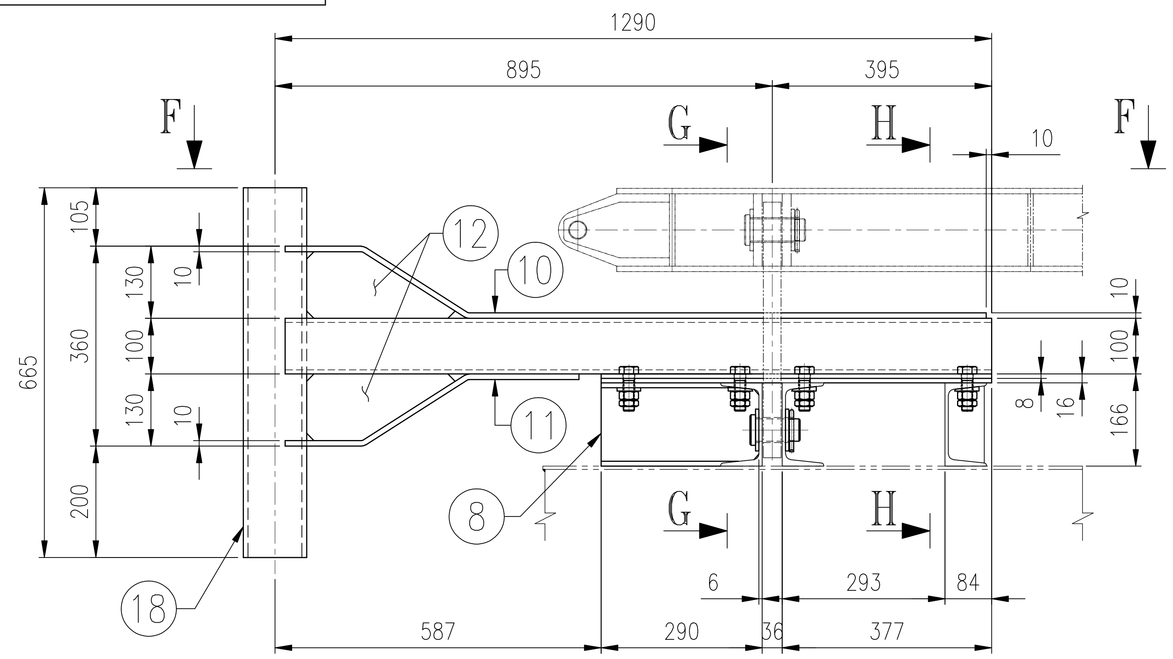

MK-B [AS DRN]
MK-Bx [OPP. HAND]

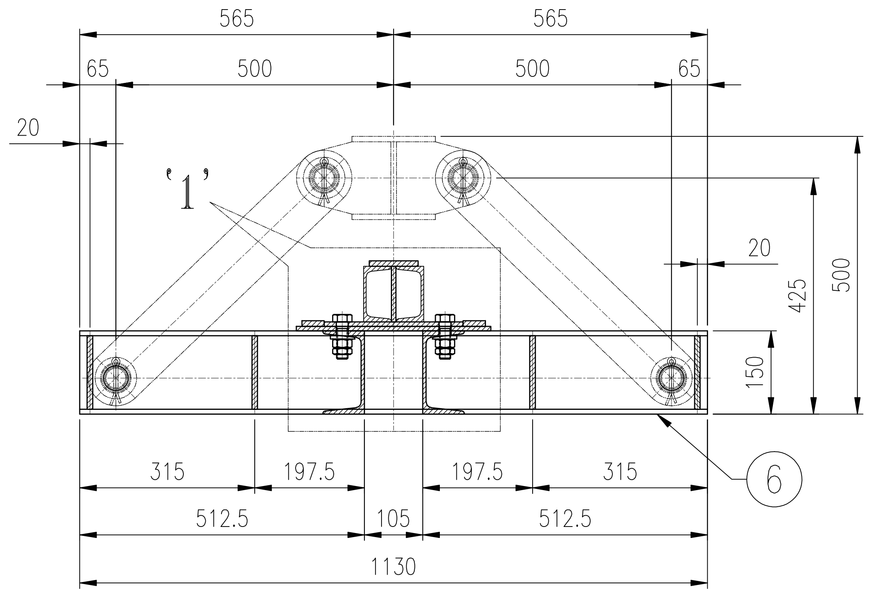

SEC-GG

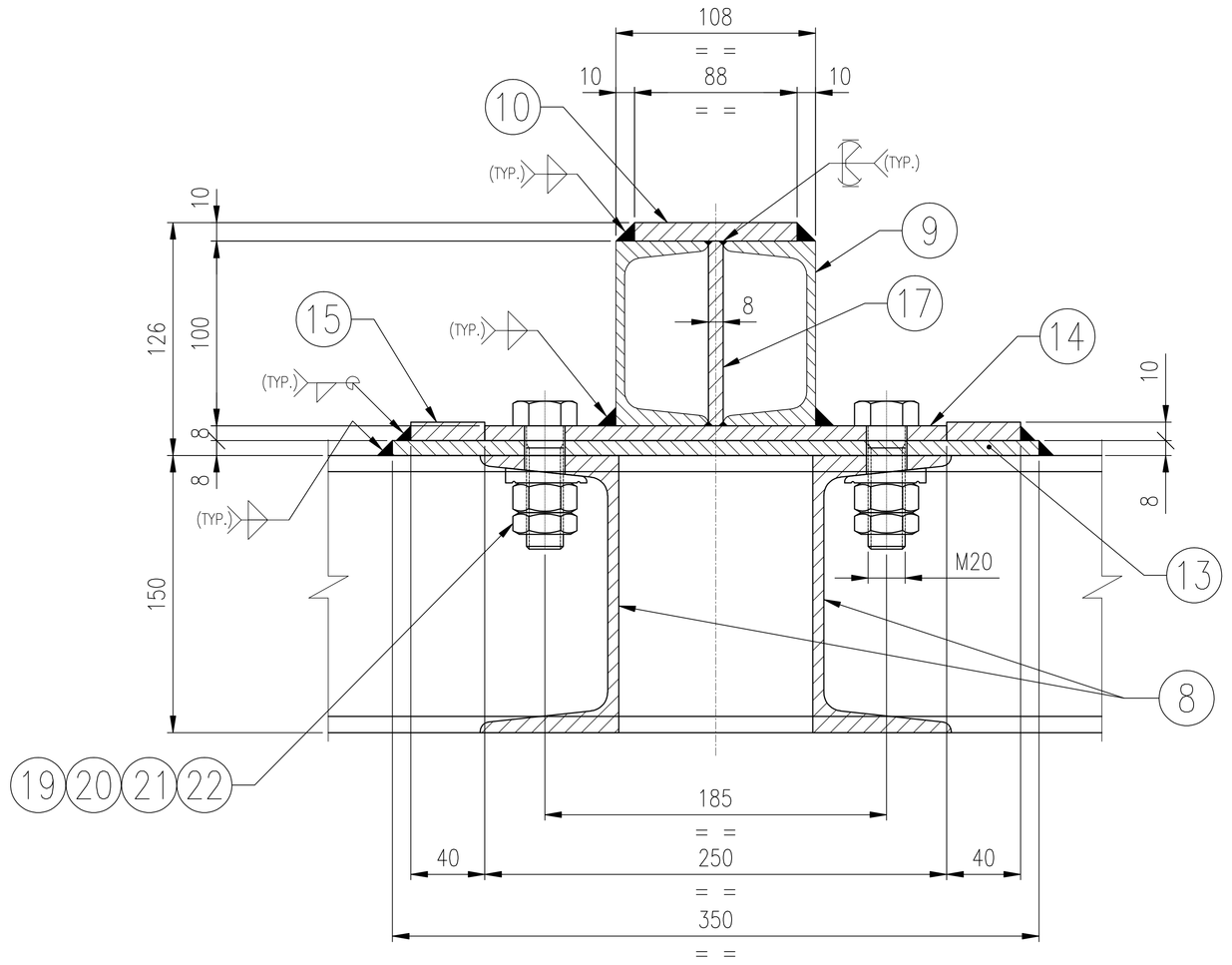

DETAIL AT '1'

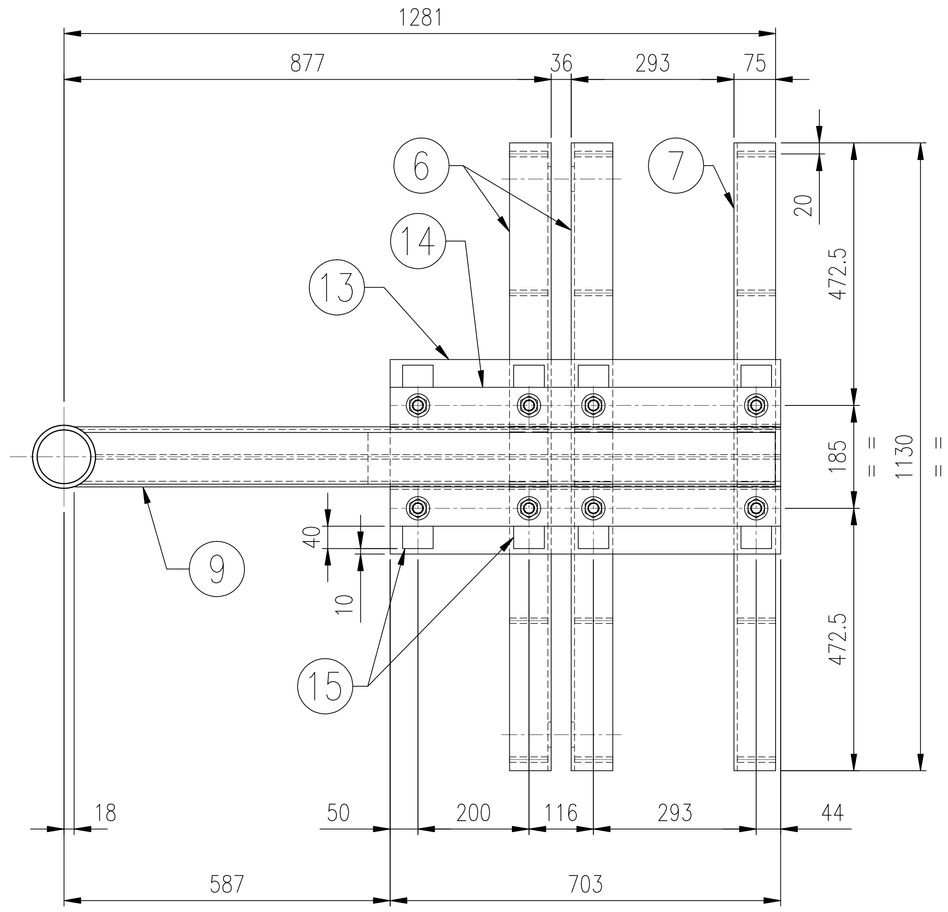

PLAN-FF

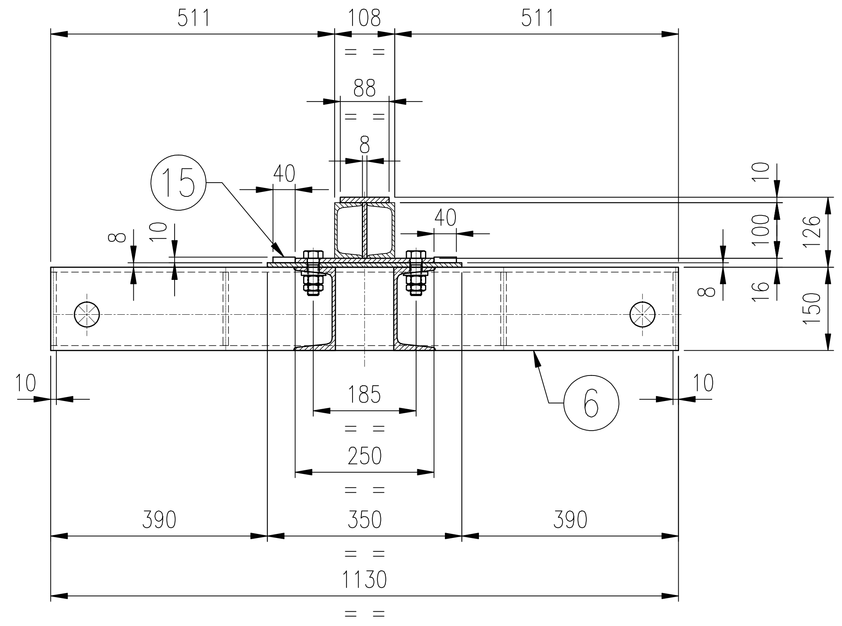

SEC-HH

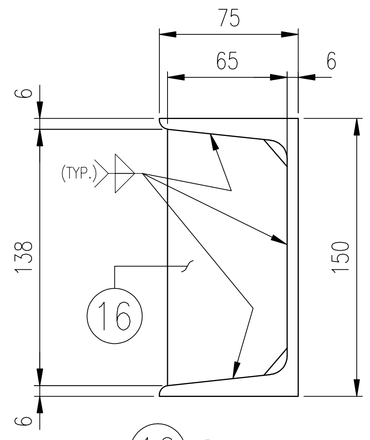

16 ~

MAT. SPEC.- Fe.410WB, IS:2062
CUT & WELD

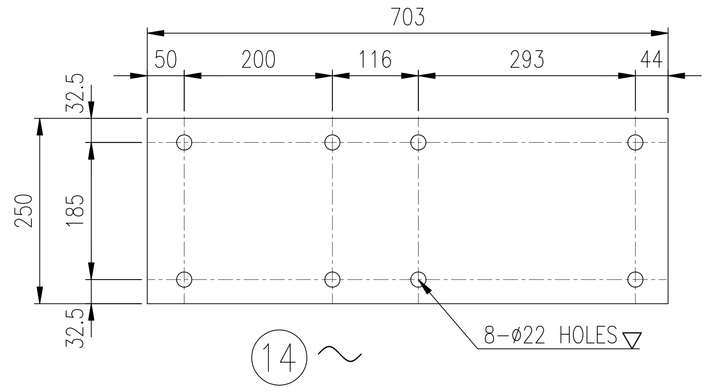

14 ~

MAT. SPEC.- Fe.410WB, IS:2062
CUT & WELD

TATA DRG. NO:-10251001961000024/A

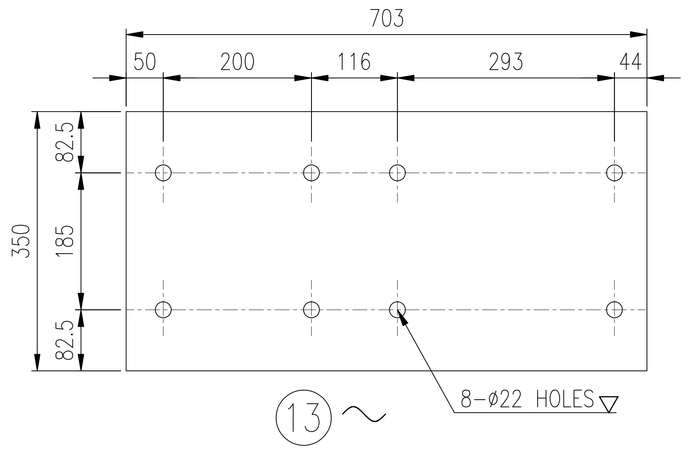

13 ~

MAT. SPEC.- Fe.410WB, IS:2062
CUT & WELD

READ THIS DRAWING IN CONJUNCTION WITH
DRG. NO. K-1-180398 SHT. 4 OF 8

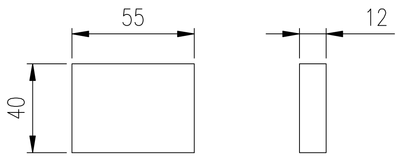

15 ~

MAT. SPEC.- Fe.410WB, IS:2062
CUT & WELD

NOTES:-

1) ROUND-OFF ALL SHARP EDGES/CORNERS.
2) SHADED TRIANGLE INDICATES MACHINING AFTER FABRICATION/STRESS-RELIEVING.
3) STRESS RELIEVE AFTER COMPLETE FABRICATION PRIOR TO MACHINING.
4) ALL WELD JOINTS ARE 6mm FILLET CONTINUOUS, U.O.N.
5) ALL WELDING SHALL CONFORM TO IS:9595.
6) ALL FABRICATION SHALL CONFORM TO IS:7215.
7) SHOP PAINT AFTER FABRICATION STRICTLY FOLLOWING TISCO STD. # 09012/2-ITEM 3a APPENDIX C.

ASSLY. MK.	ITEM No.	DESCRIPTION.	MATERIAL.	No. RQD.	UNIT WT. IN KG.	TOTAL. WT. IN KG.	REMARKS

BILL OF MATERIAL

REV. MK.	REVISIONS	JOB. NO.	BY DATE	CHKD.	APP.	DRG. No.	REFERENCE
–	–	–				–	–

FIRST ANGLE PROJECTION

SHEET SIZE- A2

SCALE 1:15

DRN.	DATE
R.G	06.10.18
CHKD.	DATE
T.K.M	16.11.18
APPROVED	DATE

DRG. DEVELOPED BY:- M/S. CAD PROFESSIONALS, JSR.-1

TATA STEEL LIMITED, KALINGANAGAR

DEPT. COKE PLANT

SUB DIVN. CDQ

DETAIL PART DETAIL OF HANGER BRACKET & ARM (FOR HOT COKE CHARGING FACILITY)

DEVIATIONS FOR UNTOLERANCED DIMENSIONS:-IS:2102 (MEDIUM)

ROUGHNESS SYMBOL	ROUGHNESS GRADE NO. IS: 3073	ROUGHNESS VALUE IN MICRONS. Ra/µm(MAX)
~	N12	50
▽	N11	25
▽▽	N9	6.3
▽▽▽	N6	0.8
▽▽▽▽	N3	0.1

DRG. NO	REV.
K-2-180398	A

SHEET. NO.
5 OF 8

IF IN DOUBT , ASK M E D DESIGN | DO NOT SCALE

This drawing concepts, ideas associated are properties of Tata Steel Limited.
Unauthorized usage, reproduction or distribution in any form is strictly prohibited