DRG.NO.

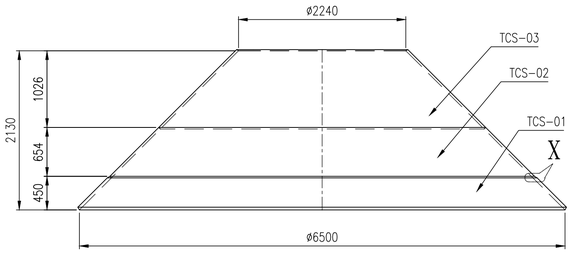

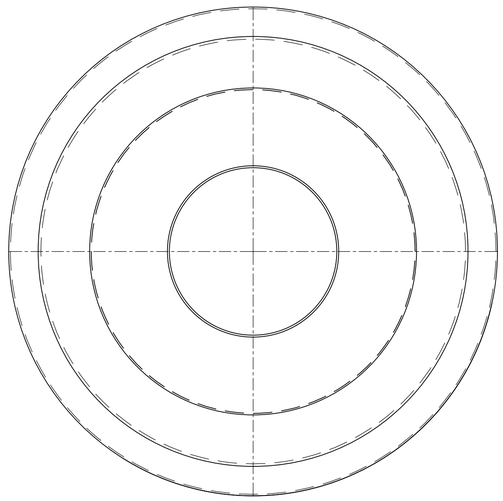

TOP CONE SHELL

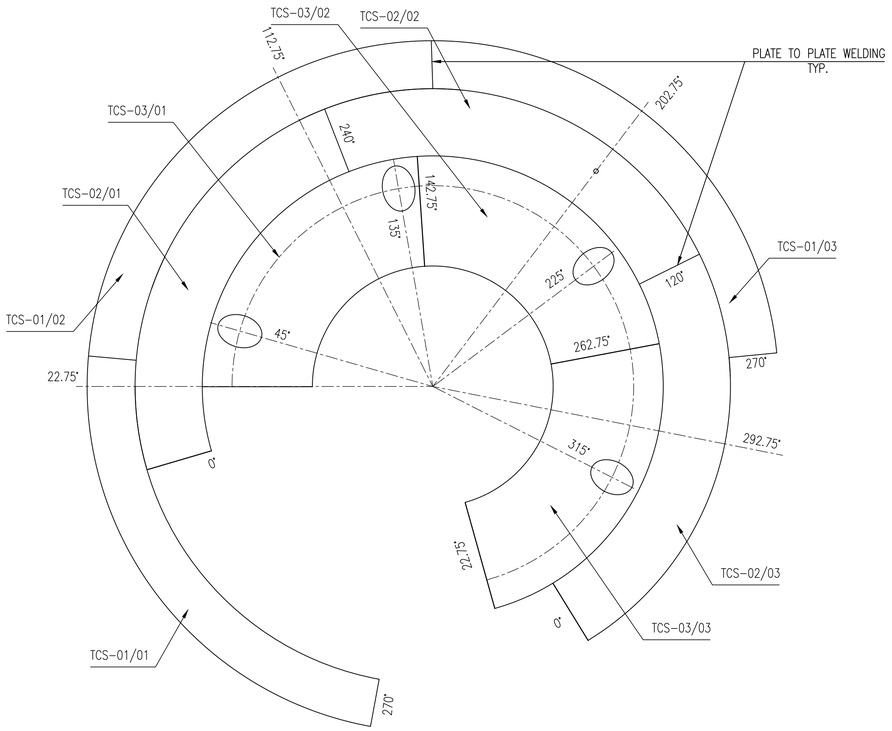

DEVELOPMENT OF TOP CONE SHELL SEGMENT (TCS 01 TO TCS 03)

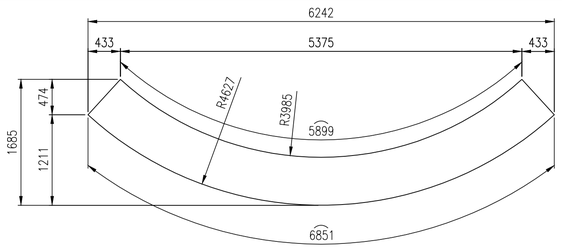

TCS-01/01 & TCS-01/03

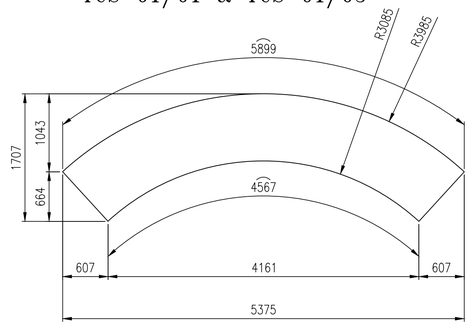

TCS-02/01 & TCS-02/03

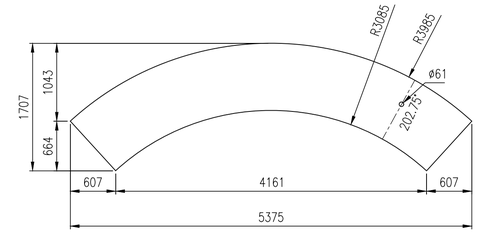

TCS-02/02

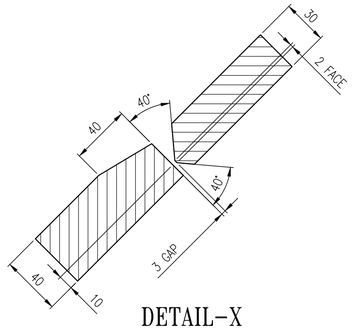

DETAIL-X

SCALE-1:2

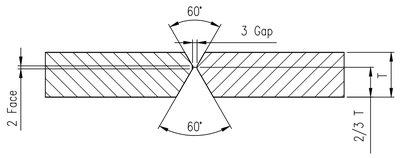

PLATE TO PLATE WELD

SCALE-1:2

NOTES:-

1) ROUND-OFF ALL SHARP EDGES/CORNERS.
2) SHADED TRIANGLE INDICATES MACHINING AFTER FABRICATION/STRESS-RELIEVING.
3) STRESS RELIEVE AFTER COMPLETE FABRICATION PRIOR TO MACHINING.
4) ALL WELD JOINTS ARE 6mm FILLET CONTINUOUS, U.O.N.
5) ALL WELDING SHALL CONFORM TO IS:9595.
6) ALL FABRICATION SHALL CONFORM TO IS:7215.
7) SHOP PAINT AFTER FABRICATION STRICTLY FOLLOWING TISCO STD. # 09012/2-ITEM 3a APPENDIX C.

PART LIST

ITEM NO.	MKD. NO.	QTY.	DESCRIPTION	WIDTH	LENGTH	THICKNESS	THICKNESS	WEIGHT IN KG.
1	TCS-01/01	1	TOP CONE SHELL	1685mm	6242mm	40mm	ASTM A516 GR.70	1285.6 KG
	TCS-01/02	1	TOP CONE SHELL	1685mm	6242mm	40mm	ASTM A516 GR.70	1285.6 KG
	TCS-01/03	1	TOP CONE SHELL	1685mm	6242mm	40mm	ASTM A516 GR.70	1285.6 KG
	TCS-02/01	1	TOP CONE SHELL	1707mm	5375mm	30mm	ASTM A516 GR.70	1109.2 KG
	TCS-02/02	1	TOP CONE SHELL	1707mm	5375mm	30mm	ASTM A516 GR.70	1109.2 KG
	TCS-02/03	1	TOP CONE SHELL	1707mm	5375mm	30mm	ASTM A516 GR.70	1109.2 KG
	TCS-03/01	1	TOP CONE SHELL	1895mm	4161mm	30mm	ASTM A516 GR.70	1206.8 KG
	TCS-03/02	1	TOP CONE SHELL	1895mm	4161mm	30mm	ASTM A516 GR.70	1206.8 KG
	TCS-03/03	1	TOP CONE SHELL	1895mm	4161mm	30mm	ASTM A516 GR.70	1206.8 KG
							TOTAL WEIGHT IN KG.- 10804.8	

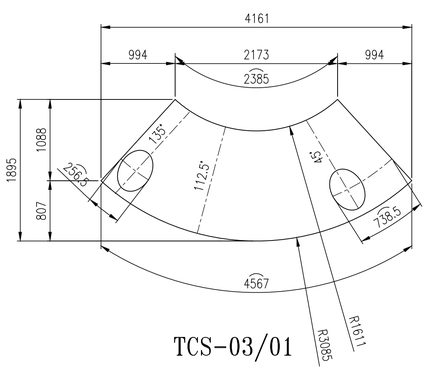

TCS-03/01

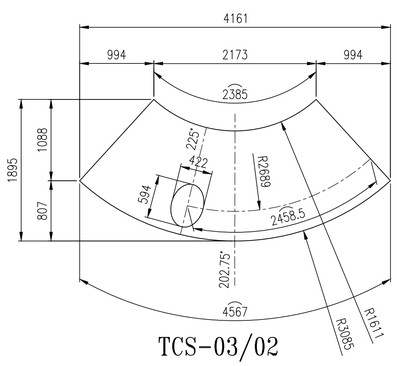

TCS-03/02

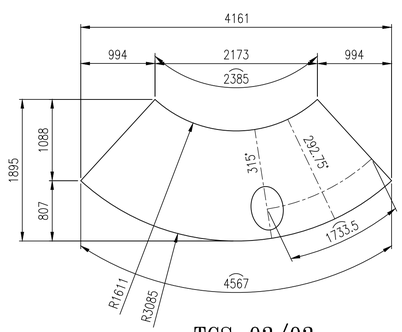

TCS-03/03

TATA DRG. NO:- 20051001961000030/A

ASSLY. MK.	ITEM No.	DESCRIPTION.	MATERIAL.	No. ROD.	UNIT WT. IN KG.	TOTAL WT. IN KG.	REMARKS
–	–	–	–	–	–	–	–

BILL OF MATERIAL

FIRST ANGLE PROJECTION

SHEET SIZE- A1

SCALE 1:40

DRN.	DATE
AMIT KUMAR	12-10-18
CHKD.	DATE
S.KANRAR	12-10-18
APPROVED	DATE
–	–

DRG. DEVELOPED BY:- M/S. CADPROFESSIONALS

TATA STEEL LIMITED, KALINGANAGAR

DEPT. BLAST FURNACE

SUB DIVN. GAS CLEANING PLANT (CYCLONE)

DETAIL TOP CONE SHELL

DEVIATIONS FOR UNTOLERANCED DIMENSIONS:-IS:2102 (MEDIUM)

ROUGHNESS SYMBOL	ROUGHNESS GRADE NO. IS: 3073	ROUGHNESS VALUE IN MICRONS. Ra(arithMAX)
~	N12	50
▽	N11	25
▽▽	N9	6.3
▽▽▽	N6	0.8
▽▽▽▽	N3	0.1

DRG. NO	REV.
K-1-180432	A

SHEET. NO.

01 OF 01

REV. MK.	REVISIONS	JOB. NO.	BY DATE	CHKD.	APP.	NOTES	DRG. No.	REFERENCE
–	–	–				– –	–	–

IF IN DOUBT , ASK M E D DESIGN

DO NOT SCALE

U

This drawing concepts, ideas associated are properties of Tata Steel Limited. Unauthorized usage, reproduction or distribution in any form is strictly prohibited