DRG.NO.

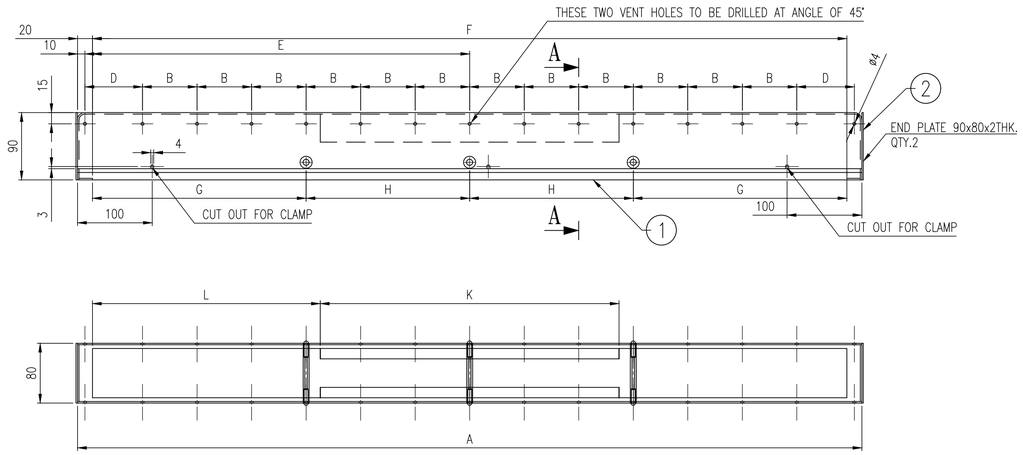

AIR DISTRIBUTION BOX (STRAIGHT)
MAT. SPEC.- PVC UNPLASTICISED

TYPE	QTY.	A	B	D	E	F	G	H	J	K	L	TOTAL WEIGHT IN KG.
K/350	4	350.0	65.0	67.5	122.5	310.0	155.0	0	35.0	0	0	0.45 KG.
K/500	4	500.0	68.0	70.0	196.0	460.0	128.0	0	70.0	0	0	0.60 KG.
K/550	4	550.0	75.0	77.5	217.0	510.0	142.5	0	75.0	340.0	85.0	0.66 KG.
K/600	8	600.0	70.0	80.0	280.0	560.0	210.0	0	90.0	340.0	110.0	0.72 KG.
K/650	24	650.0	70.0	70.0	270.0	610.0	200.0	0	100.0	380.0	115.0	0.77 KG.
K/750	6	750.0	73.0	73.0	355.0	710.0	209.0	146.0	100.0	400.0	155.0	0.88 KG.
K/800	4	800.0	70.0	75.0	345.0	760.0	205.0	175.0	100.0	400.0	180.0	0.93 KG.
K/950	4	950.0	71.0	74.5	419.5	910.0	206.5	248.5	110.0	400.0	255.0	1.09 KG.
K/1000	32	1000.0	75.0	77.5	442.5	960.0	217.5	262.5	120.0	400.0	280.0	1.15 KG.
K/1050	4	1050.0	73.0	77.0	505.0	1010.0	286.0	219.0	120.0	400.0	305.0	1.25 KG.

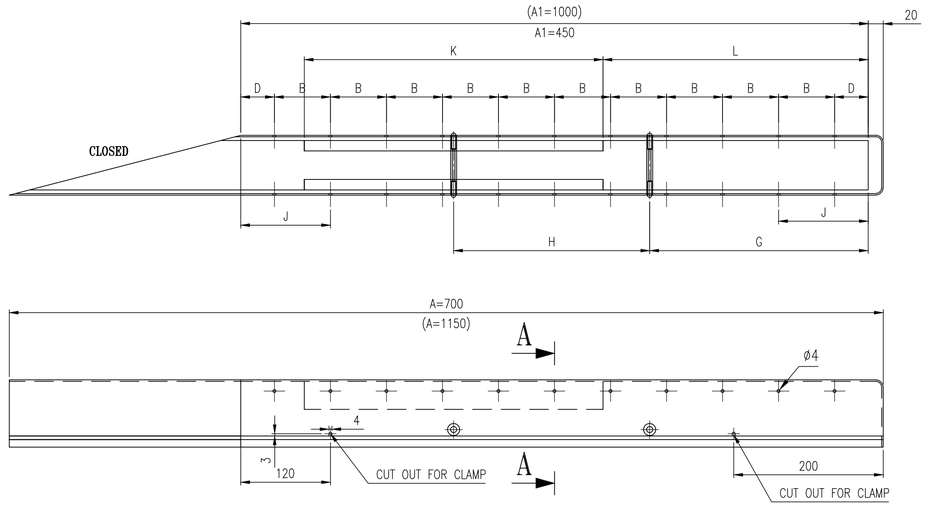

AIR DISTRIBUTION BOX (CHAMFERED OPP. HAND)
MAT. SPEC.- PVC UNPLASTICISED

TYPE	QTY.	A	B	D	G	H	J	K	L	TOTAL WEIGHT
K/1150	2	1150.0	75.0	67.5	292.5	262.5	120.0	400.0	355.0	0.83 KG.
K/700	2	700.0	75.0	67.5	217.5	–	100	380.0	130.0	1.45 KG.

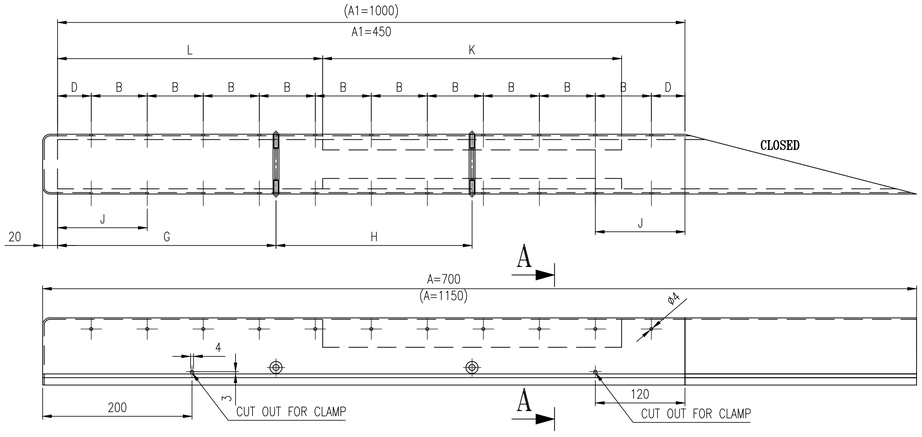

AIR DISTRIBUTION BOX (CHAMFERED)
MAT. SPEC.- PVC UNPLASTICISED

TYPE	QTY.	A	B	D	G	H	J	K	L	TOTAL WEIGHT
K/1150	2	1150.0	75.0	67.5	292.5	262.5	120.0	400.0	355.0	0.83 KG.
K/700	2	700.0	75.0	67.5	217.5	–	100	380.0	130.0	1.45 KG.

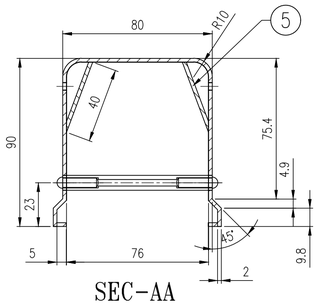

SEC-AA
SCALE-1:1.6

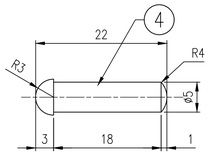

SCALE-2:1

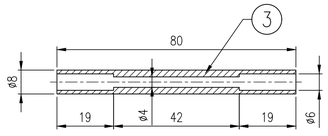

SCALE-1:1

VENT HOLES

1) FOR BOXES WITH VENT HOLE IN CENTER FOR BOX (E=0.5xF)
2) DRILL HOLES OPPOSITE EACH OTHER FOR BOX WITH VENT HOLES OUT OF CENTER OF BOX. (E=0.5xF)
3) DRILL HOLES NOT OPPOSITE EACH OTHER FOR IE DIMENSIONS TO BE MEASURED FROM LEFT SIDE FOR EACH SIDE OF BOX.

NOTES:-
1) FORMATION OF BOXES TO BE DONE BY MOULD.
2) 3 FACES OF BOXES SHOULD MADE BY ONE MOULD AND OTHER FACES ARE PVC ADHESIVE JOINT.
3) THREE MEMBER OF GROOVE TO BE PROVIDED IN EACH BOX LENGTH GREATER THAN 400MM.
4) TWO MEMBER OF GROOVE TO BE PROVIDED IN EACH BOX LENGTH BETWEEN 400MM.

NOTES:-

1) THE FOLLOWING DESIGNATION APPLIES TO THE DEFERENT TYPE OF BOXES.

FOR EXAMPLES:-
K...../0 NO HOLE IN THE FRONT SIDE
K...../1 NO HOLE IN THE FRONT SIDE

TATA DRG. NO:-22221001962000179/A

ASSLY. MK.	ITEM No.	DESCRIPTION.	MATERIAL.	No. ROD.	UNIT WT. IN KG.	TOTAL WT. IN KG.	REMARKS
	5	RIB PLATE 2x40xK	PVC UNPLASTICISED				
	4	RIVET 5x18	PVC UNPLASTICISED				
	3	PIPE 8x15x80	PVC UNPLASTICISED				
	2	END PLATE 90x80x2THK.	PVC UNPLASTICISED				
–	1	MIDDLE SECTION 2THK.	PVC UNPLASTICISED	–	–	–	–

BILL OF MATERIAL

REV. MK.	REVISIONS	JOB. NO.	BY DATE	CHKD.	APP.	NOTES	DRG. No.	REFERENCE
–	–	–				–	–	–

FIRST ANGLE PROJECTION

SHEET SIZE- A1
SCALE 1:4

	DATE
DRN. AMIT KUMAR	15-11-18
CHKD. S.KANRAR	16-11-18
APPROVED –	DATE –

DRG. DEVELOPED BY:- M/S. CAD PROFESSIONALS

TATA STEEL LIMITED, KALINGANAGAR

DEPT. SMS

SUB DIVN. CASTER DCW PRESSURE FILTER

DETAIL AIR DISTRIBUTION BOX

DEVIATIONS FOR UNTOLERANCED DIMENSIONS:-IS:2102 (MEDIUM)

ROUGHNESS SYMBOL	ROUGHNESS GRADE NO. IS: 3073	ROUGHNESS VALUE IN MICRON Ra(µm)(MAX)
~	N12	50
▽	N11	25
▽▽	N9	6.3
▽▽▽	N8	0.8
▽▽▽▽	N5	0.1

DRG. NO	REV.
K-1-180443	A

SHEET. NO. 01 OF 01

IF IN DOUBT , ASK M E D DESIGN

DO NOT SCALE

This drawing concepts, ideas associated are properties of Tata Steel Limited. Unauthorized usage, reproduction or distribution in any form is strictly prohibited