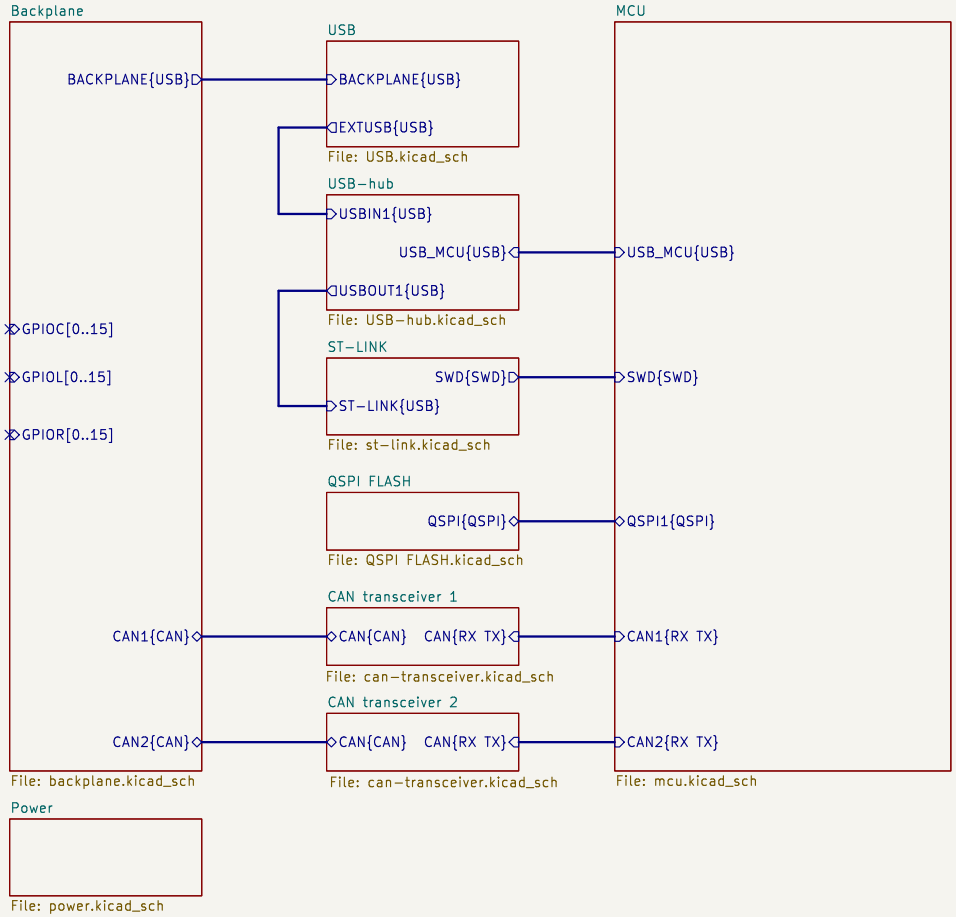


Project author: <author>
Base project authors: Dominik Pluta, Artem Horiunov
**KoNaR**

Sheet: /
File: base-module.kicad_sch

***Title: ModuCard base module***

| | | |
|---|---|---|
| Size: A4 | Date: 2025-02-25 | **Rev: 1.0.1** |
| KiCad E.D.A. 8.0.9 | | Id: 1/10 |

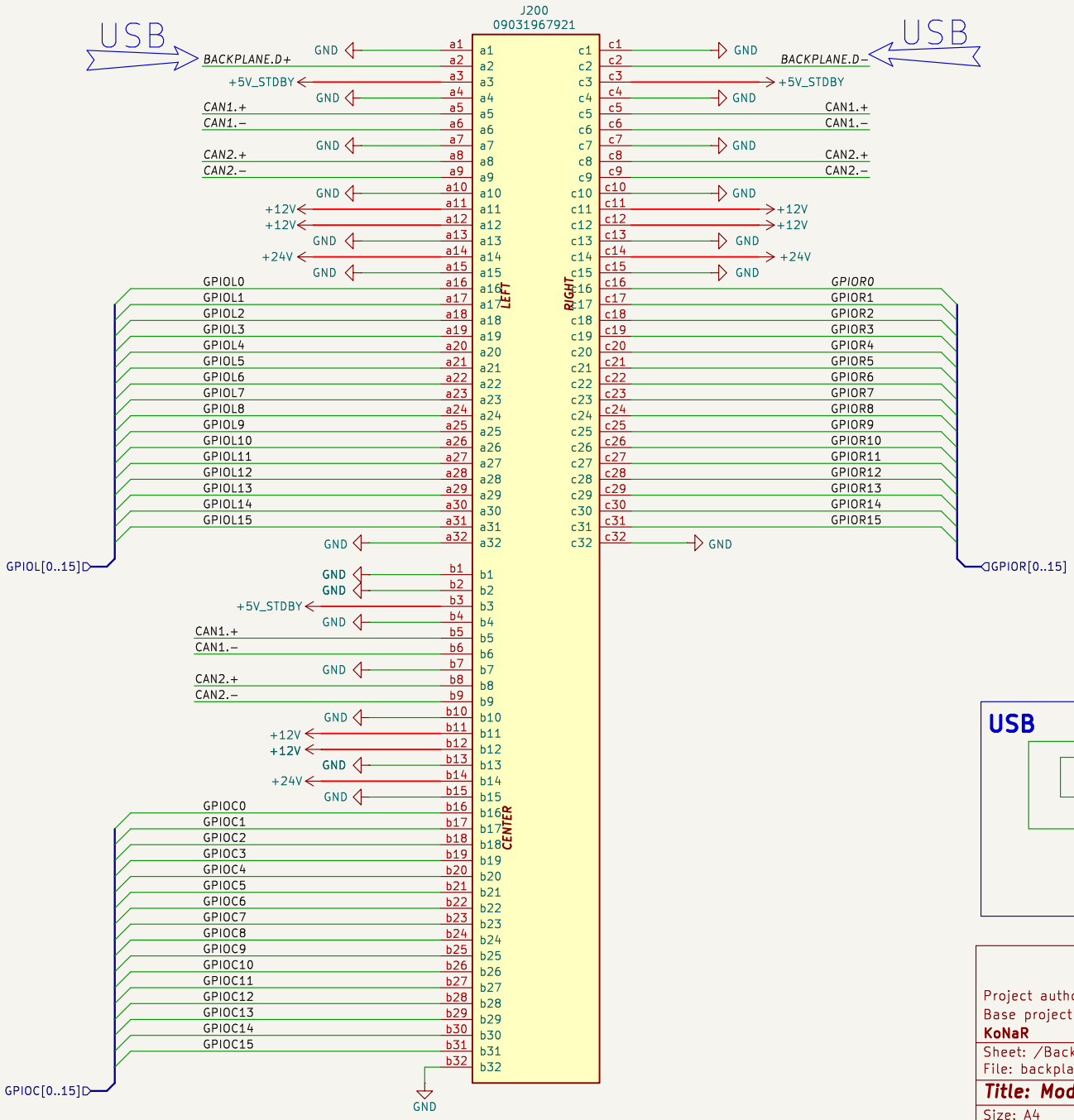


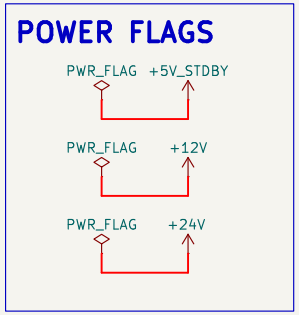


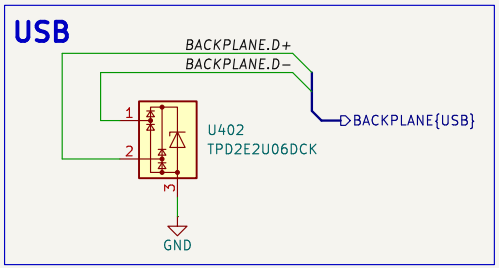


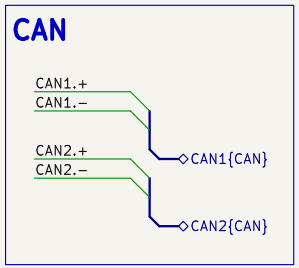


Project author: <author>
Base project authors: Dominik Pluta, Artem Horiunov
**KoNaR**

Sheet: /Backplane/
File: backplane.kicad_sch

***Title: ModuCard base module***

| | | |
|---|---|---|
| Size: A4 | Date: 2025-02-25 | **Rev: 1.0.1** |
| KiCad E.D.A. 8.0.9 | | Id: 2/10 |

## 5V DC/DC CONVERTER

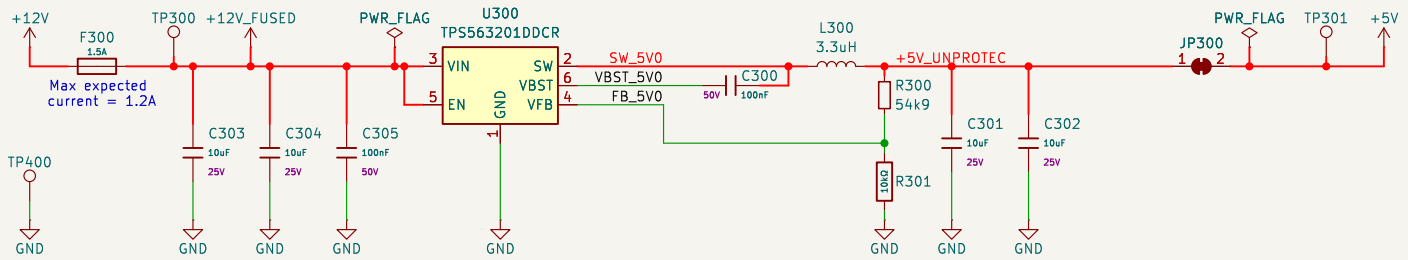


$V_{OUT}$ = 0.765*(1+R300/R301)
$V_{OUT}$ = 0.765*(1+54k9/10k) = 4.96V

## 3V3 DC/DC CONVERTER

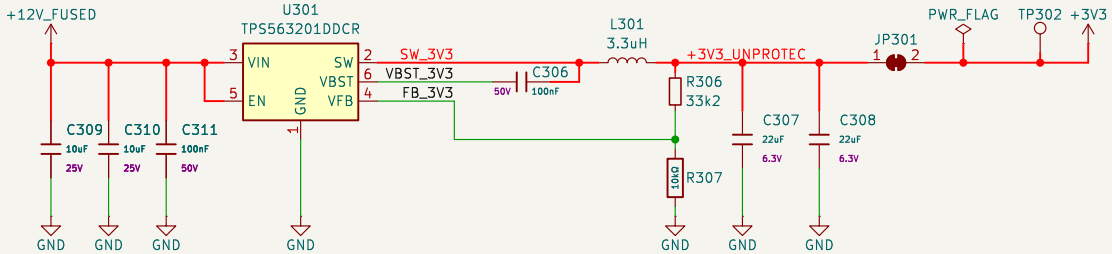


$V_{OUT}$ = 0.765*(1+R302/R307)
$V_{OUT}$ = 0.765*(1+33k2/10k) = 3.3V

## POWER INDICATOR LEDs

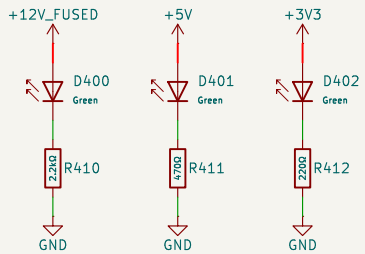


Target $I_{LED}$ = 5mA

Project author: <author>
Base project authors: Dominik Pluta, Artem Horiunov
**KoNaR**

Sheet: /Power/
File: power.kicad_sch

***Title: ModuCard base module***

| | | |
|---|---|---|
| Size: A4 | Date: 2025-02-25 | **Rev: 1.0.1** |
| KiCad E.D.A. 8.0.9 | | Id: 3/10 |

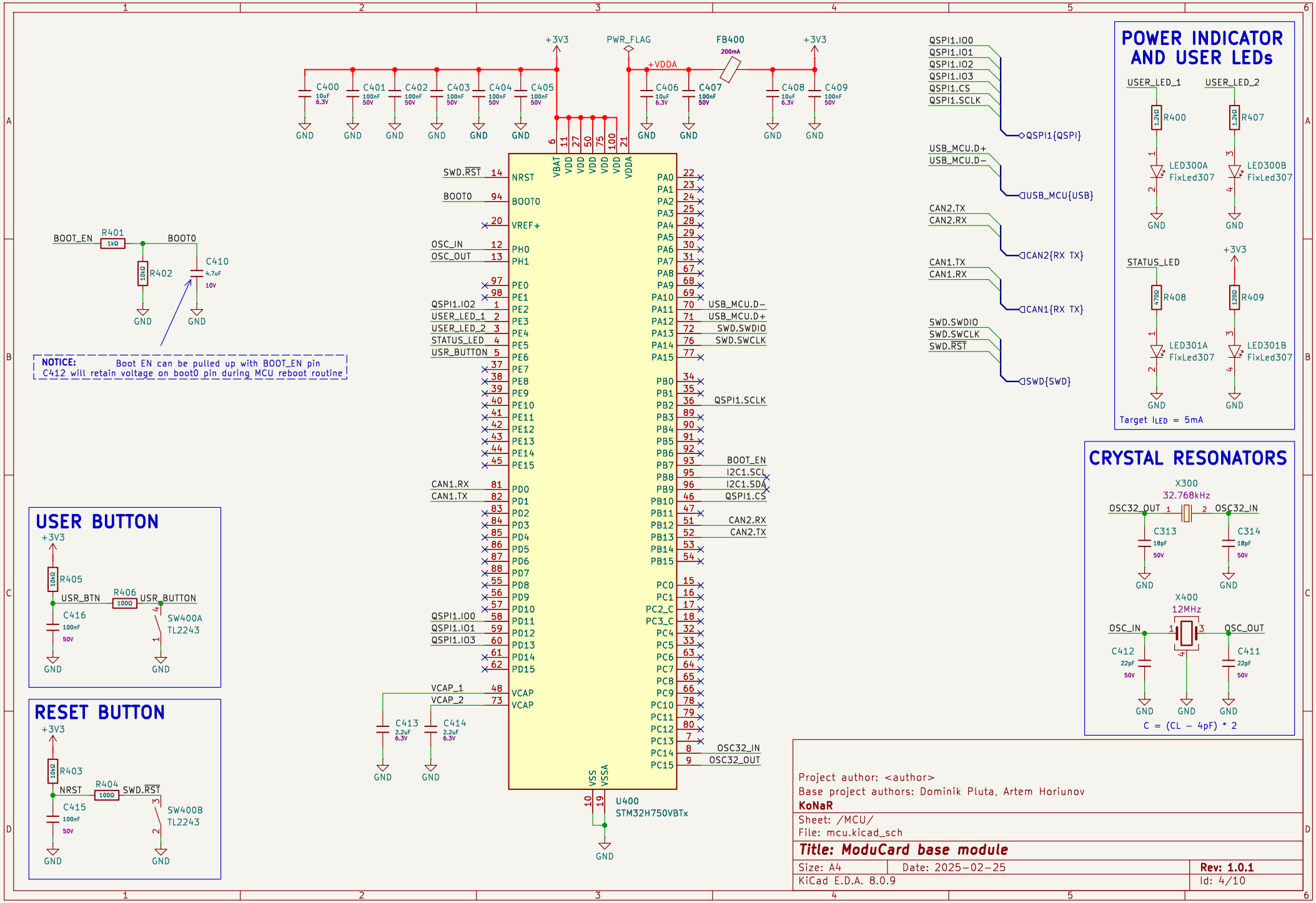
+3V3
PWR_FLAG
FB400
200mA
+VDDA
C400 10uF 6.3V
C401 100nF 50V
C402 100nF 50V
C403 100nF 50V
C404 100nF 50V
C405 100nF 50V
C406 10uF 6.3V
C407 100nF 50V
C408 10uF 6.3V
C409 100nF 50V
GND
VBAT VDD VDD VDD VDD VDD VDD VDDA
6 11 27 50 75 100 21
SWD.RST 14 NRST
BOOT0 94 BOOT0
20 VREF+
OSC_IN 12 PH0
OSC_OUT 13 PH1
97 PE0
98 PE1
QSPI1.IO2 1 PE2
USER_LED_1 2 PE3
USER_LED_2 3 PE4
STATUS_LED 4 PE5
USR_BUTTON 5 PE6
37 PE7
38 PE8
39 PE9
40 PE10
41 PE11
42 PE12
43 PE13
44 PE14
45 PE15
CAN1.RX 81 PD0
CAN1.TX 82 PD1
83 PD2
84 PD3
85 PD4
86 PD5
87 PD6
88 PD7
55 PD8
56 PD9
57 PD10
QSPI1.IO0 58 PD11
QSPI1.IO1 59 PD12
QSPI1.IO3 60 PD13
61 PD14
62 PD15
VCAP_1 48 VCAP
VCAP_2 73 VCAP
PA0 22
PA1 23
PA2 24
PA3 25
PA4 28
PA5 29
PA6 30
PA7 31
PA8 67
PA9 68
PA10 69
PA11 70 USB_MCU.D−
PA12 71 USB_MCU.D+
PA13 72 SWD.SWDIO
PA14 76 SWD.SWCLK
PA15 77
PB0 34
PB1 35
PB2 36 QSPI1.SCLK
PB3 89
PB4 90
PB5 91
PB6 92
PB7 93 BOOT_EN
PB8 95 I2C1.SCL
PB9 96 I2C1.SDA
PB10 46 QSPI1.CS
PB11 47
PB12 51 CAN2.RX
PB13 52 CAN2.TX
PB14 53
PB15 54
PC0 15
PC1 16
PC2_C 17
PC3_C 18
PC4 32
PC5 33
PC6 63
PC7 64
PC8 65
PC9 66
PC10 78
PC11 79
PC12 80
PC13 7
PC14 8 OSC32_IN
PC15 9 OSC32_OUT
VSS VSSA
10 19
U400
STM32H750VBTx
C413 2.2uF 6.3V
C414 2.2uF 6.3V
BOOT_EN
R401 1kΩ
R402 10kΩ
C410 4.7uF 10V
NOTICE: Boot EN can be pulled up with BOOT_EN pin
C412 will retain voltage on boot0 pin during MCU reboot routine
QSPI1.IO0
QSPI1.IO1
QSPI1.IO2
QSPI1.IO3
QSPI1.CS
QSPI1.SCLK
QSPI1{QSPI}
USB_MCU.D+
USB_MCU.D−
USB_MCU{USB}
CAN2.TX
CAN2.RX
CAN2{RX TX}
CAN1.TX
CAN1.RX
CAN1{RX TX}
SWD.SWDIO
SWD.SWCLK
SWD.RST
SWD{SWD}
POWER INDICATOR AND USER LEDs
USER_LED_1
USER_LED_2
R400 1.2kΩ
R407 1.2kΩ
LED300A FixLed307
LED300B FixLed307
STATUS_LED
R408 470Ω
R409 120Ω
LED301A FixLed307
LED301B FixLed307
Target ILED = 5mA
CRYSTAL RESONATORS
X300
32.768kHz
OSC32_OUT
OSC32_IN
C313 18pF 50V
C314 18pF 50V
X400
12MHz
OSC_IN
OSC_OUT
C412 22pF 50V
C411 22pF 50V
C = (CL − 4pF) * 2
USER BUTTON
R405 10kΩ
R406 100Ω
USR_BTN
USR_BUTTON
C416 100nF 50V
SW400A TL2243
RESET BUTTON
R403 10kΩ
R404 100Ω
NRST
SWD.RST
C415 100nF 50V
SW400B TL2243
Project author: <author>
Base project authors: Dominik Pluta, Artem Horiunov
KoNaR
Sheet: /MCU/
File: mcu.kicad_sch
Title: ModuCard base module
Size: A4
Date: 2025-02-25
Rev: 1.0.1
KiCad E.D.A. 8.0.9
Id: 4/10

# CAN TRANSCEIVER

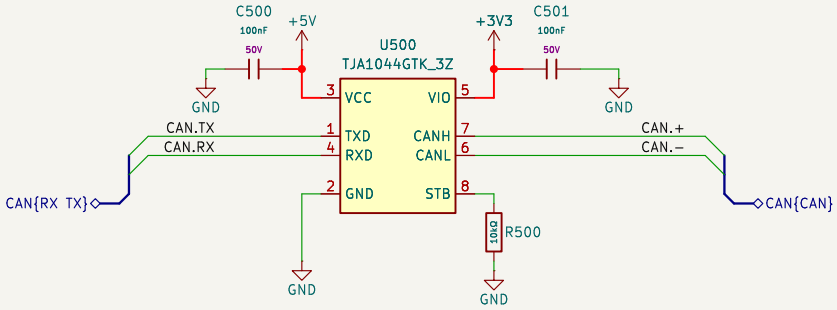


Project author: <author>
Base project authors: Dominik Pluta, Artem Horiunov
**KoNaR**

Sheet: /CAN transceiver 1/
File: can−transceiver.kicad_sch

***Title: ModuCard base module***

| | | |
|---|---|---|
| Size: A4 | Date: 2025−02−25 | **Rev: 1.0.1** |
| KiCad E.D.A. 8.0.9 | | Id: 5/10 |

# CAN TRANSCEIVER

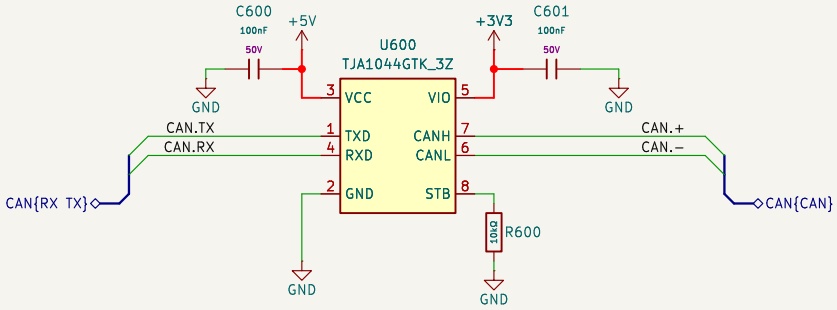


Project author: <author>
Base project authors: Dominik Pluta, Artem Horiunov
**KoNaR**

Sheet: /CAN transceiver 2/
File: can−transceiver.kicad_sch

***Title: ModuCard base module***

| | | |
|---|---|---|
| Size: A4 | Date: 2025−02−25 | **Rev: 1.0.1** |
| KiCad E.D.A. 8.0.9 | | Id: 6/10 |

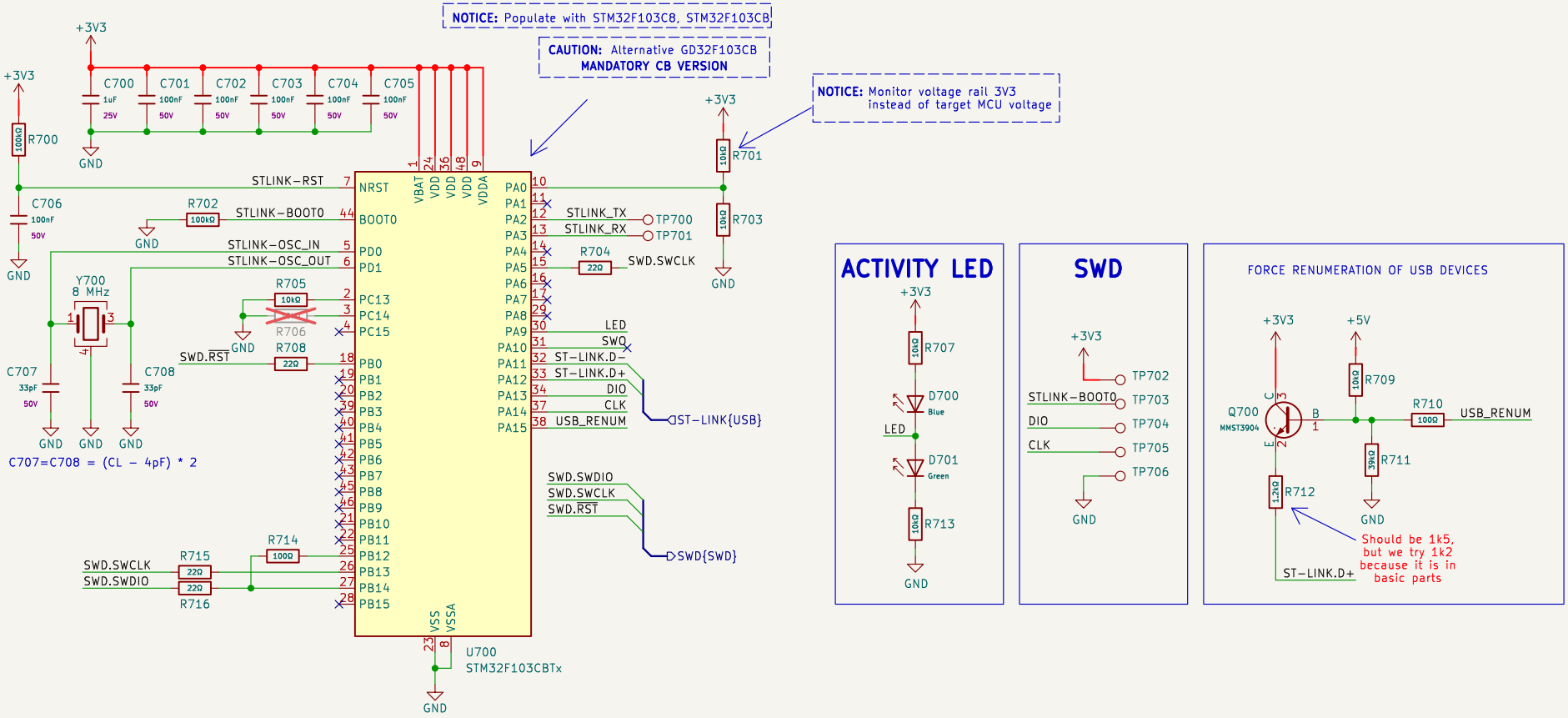


**Credit to:**
https://github.com/lbthomsen/st-link/tree/master
https://stm32world.com/wiki/DIY_STM32_Programmer_(ST-Link/V2-1)
**for providing amazing reverse engeenering of ST-link**

Project author: <author>
Base project authors: Dominik Pluta, Artem Horiunov
**KoNaR**

Sheet: /ST-LINK/
File: st-link.kicad_sch

***Title: ModuCard base module***

| | | |
|---|---|---|
| Size: A4 | Date: 2025-02-25 | **Rev: 1.0.1** |
| KiCad E.D.A. 8.0.9 | | Id: 7/10 |

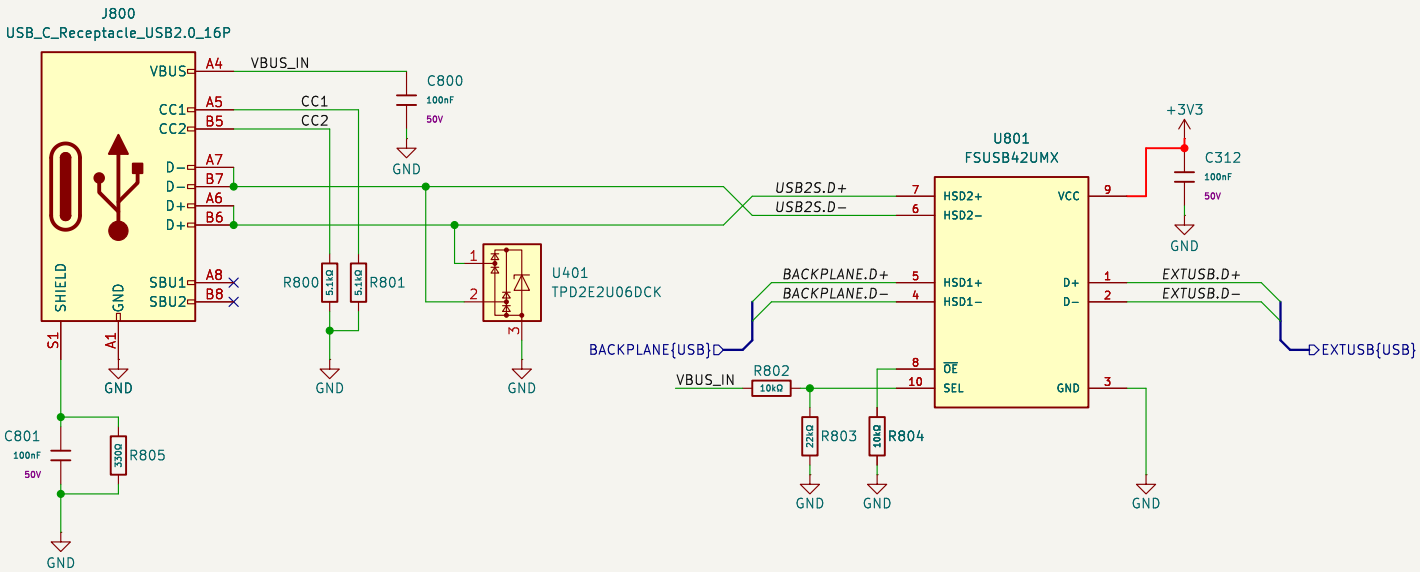


Project author: <author>
Base project authors: Dominik Pluta, Artem Horiunov
**KoNaR**

Sheet: /USB/
File: USB.kicad_sch

***Title: ModuCard base module***

| | | |
|---|---|---|
| Size: A4 | Date: 2025-02-25 | **Rev: 1.0.1** |
| KiCad E.D.A. 8.0.9 | | Id: 8/10 |

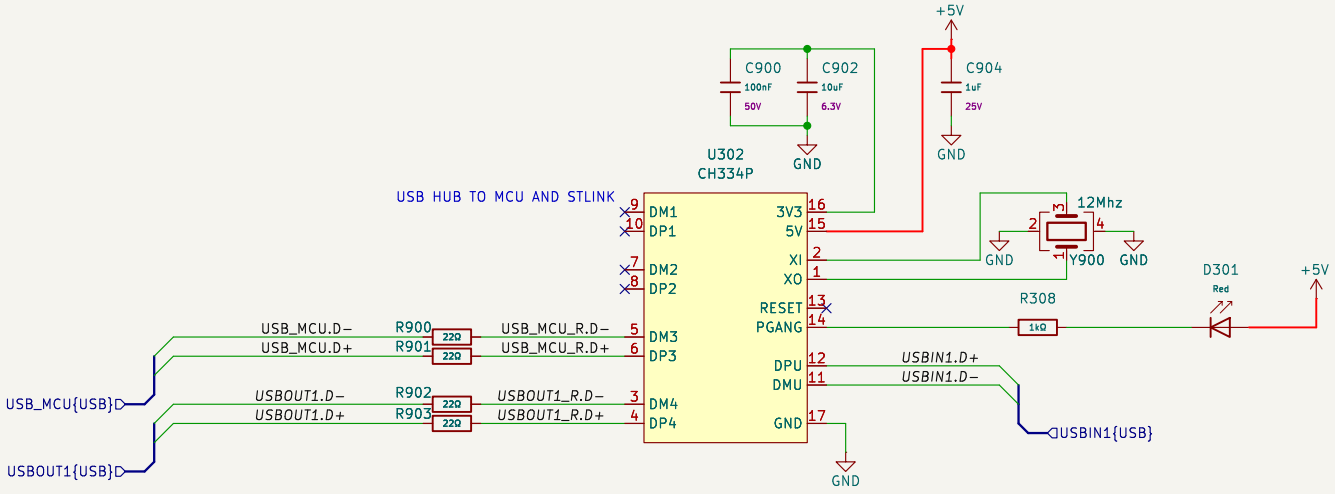


Project author: <author>
Base project authors: Dominik Pluta, Artem Horiunov
**KoNaR**

Sheet: /USB-hub/
File: USB-hub.kicad_sch

***Title: ModuCard base module***

| | | |
|---|---|---|
| Size: A4 | Date: 2025-02-25 | **Rev: 1.0.1** |
| KiCad E.D.A. 8.0.9 | | Id: 9/10 |

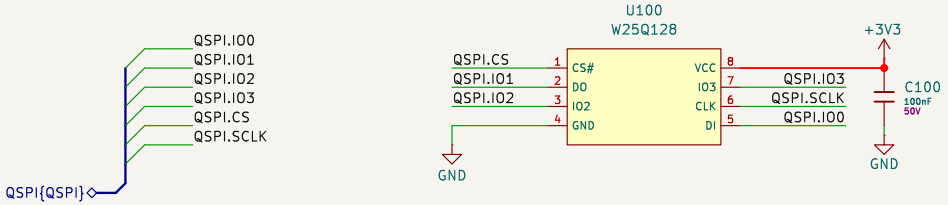


Project author: <author>
Base project authors: Dominik Pluta, Artem Horiunov
**KoNaR**

Sheet: /QSPI FLASH/
File: QSPI FLASH.kicad_sch

***Title: ModuCard base module***

| | | |
|---|---|---|
| Size: A4 | Date: 2025-02-25 | **Rev: 1.0.1** |
| KiCad E.D.A. 8.0.9 | | Id: 10/10 |