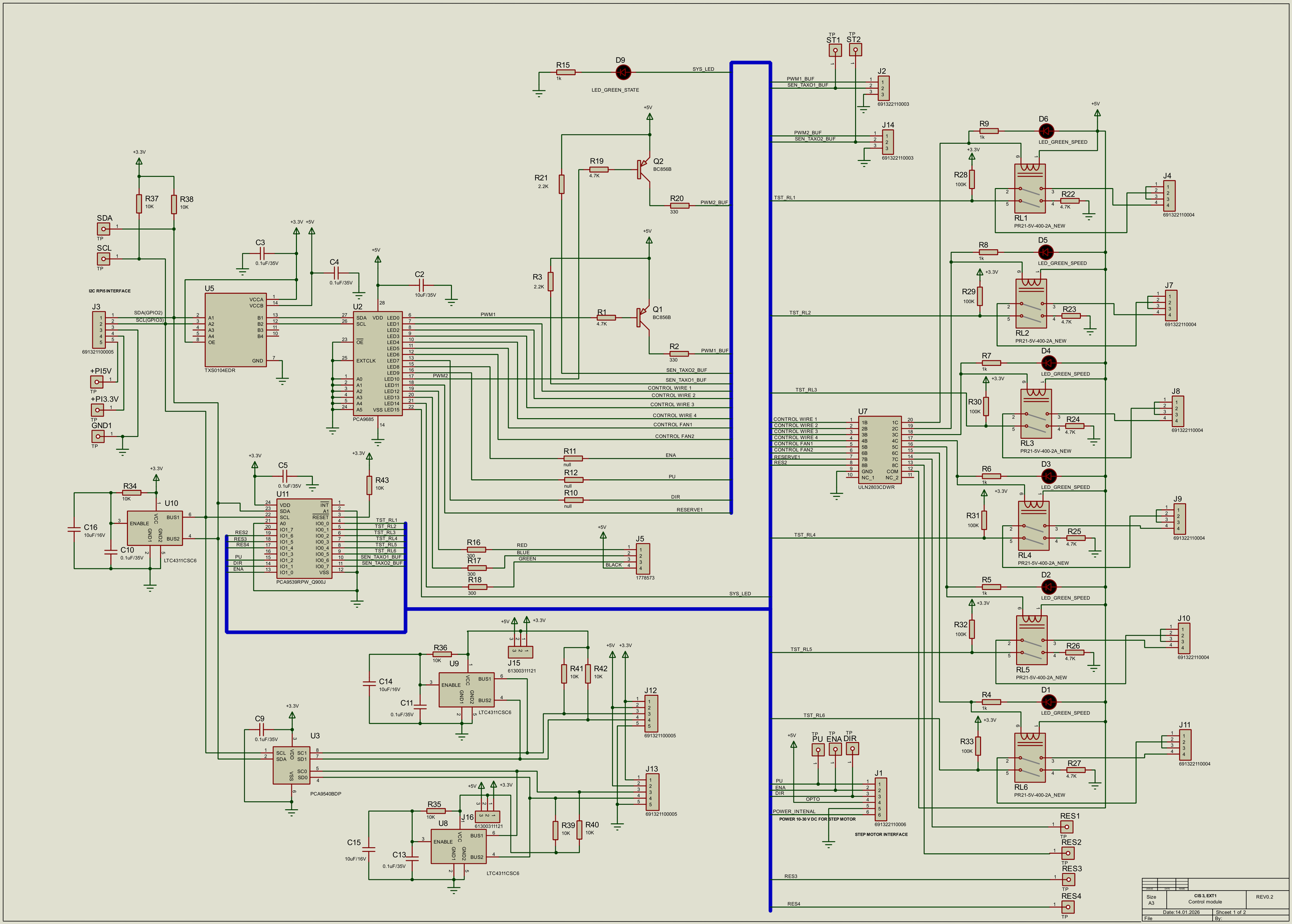
I2C RPi5 INTERFACE
SDA
SCL
+PI5V
+PI3.3V
GND1
J3
691321100005
SDA(GPIO2)
SCL(GPIO3)
U5
TXS0104EDR
U2
PCA9685
U11
PCA9539RPW_Q900J
U10
LTC4311CSC6
U3
PCA9540BDP
U9
U8
J15
J16
61300311121
J12
J13
691321100005
J5
1778573
RED
BLUE
GREEN
BLACK
SYS_LED
LED_GREEN_STATE
PWM1
PWM2
PWM1_BUF
PWM2_BUF
SEN_TAXO1_BUF
SEN_TAXO2_BUF
CONTROL WIRE 1
CONTROL WIRE 2
CONTROL WIRE 3
CONTROL WIRE 4
CONTROL FAN1
CONTROL FAN2
ENA
PU
DIR
RESERVE1
RES2
RES3
RES4
TST_RL1
TST_RL2
TST_RL3
TST_RL4
TST_RL5
TST_RL6
J2
691322110003
J14
691322110003
U7
ULN2803CDWR
J1
691322110006
POWER_INTENAL
OPTO
POWER 10-30 V DC FOR STEP MOTOR
STEP MOTOR INTERFACE
RL1
RL2
RL3
RL4
RL5
RL6
PR21-5V-400-2A_NEW
J4
J7
J8
J9
J10
J11
691322110004
LED_GREEN_SPEED
D1
D2
D3
D4
D5
D6
ST1
ST2
RES1
RES2
RES3
RES4
Size
A3
CIS 3, EXT1
Control module
REV0.2
Date:14.01.2026
Shceet 1 of 2
File
By:

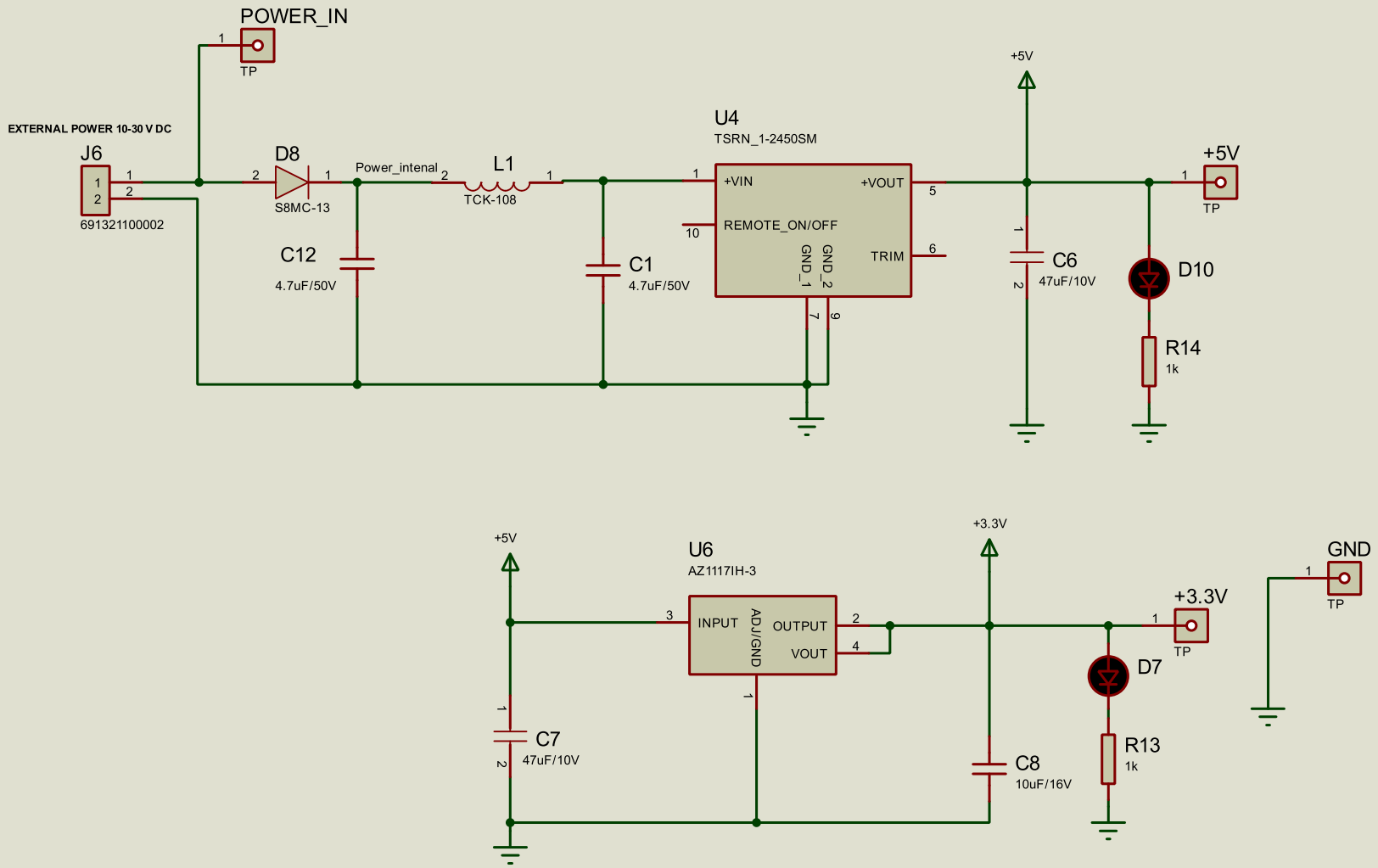

Size A4	CIS 3, EXT1 Power module		REV0.2
Date:14.01.2026		Shceet 2 of 2	
File		By:	