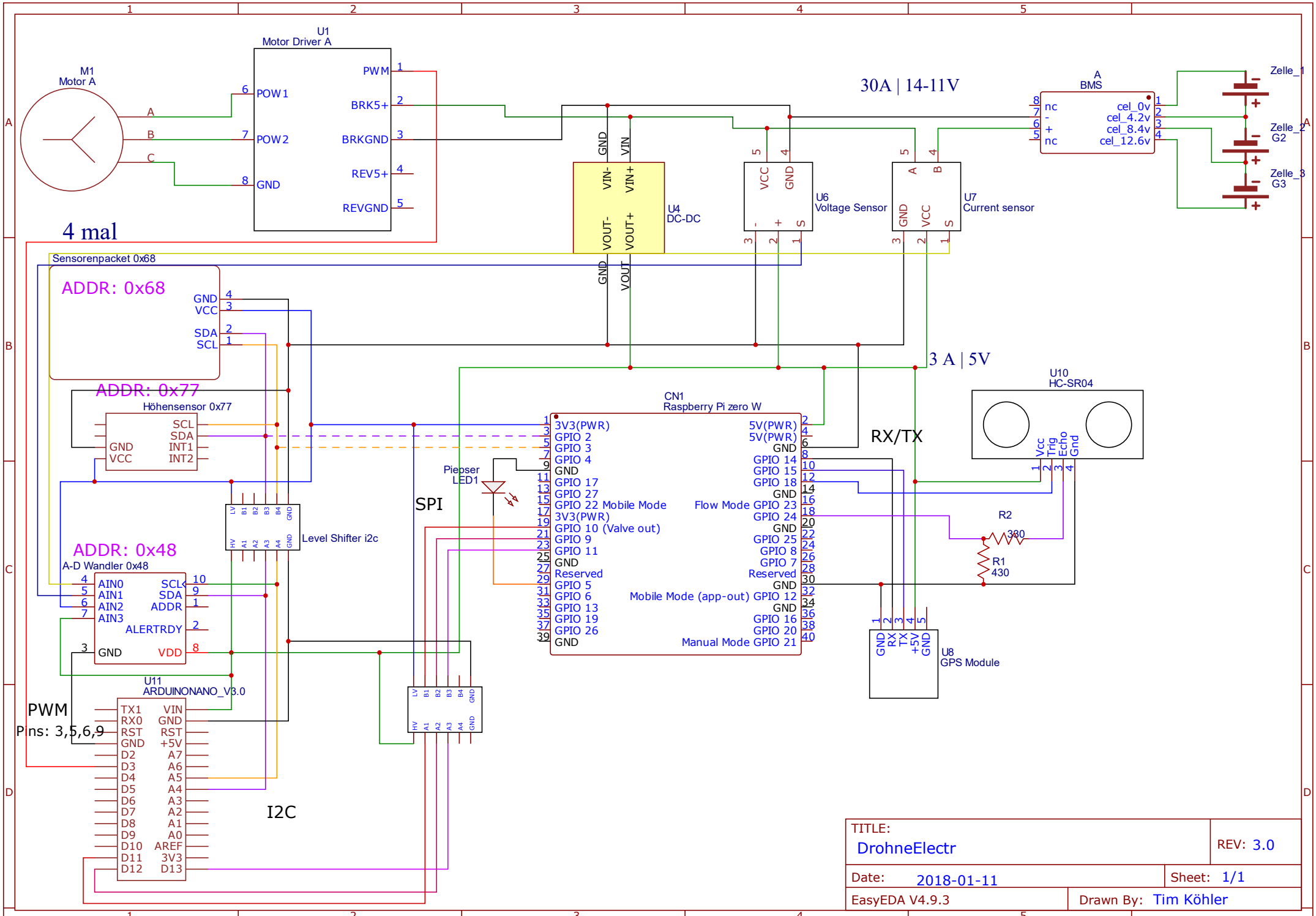Level Shifter arduino