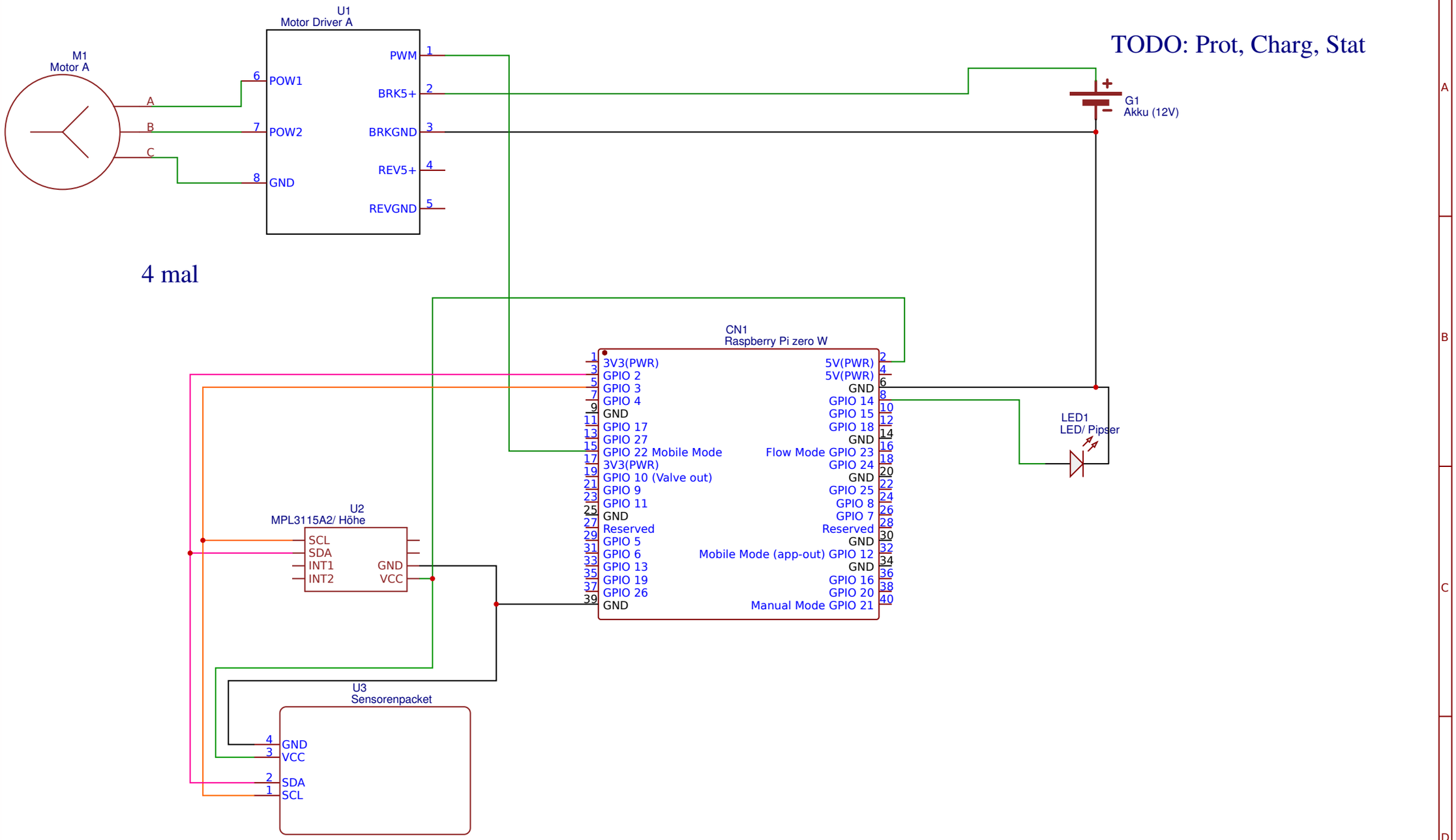

TITLE: DrohneElectr	REV: 1.0
Date: 2017-10-03	Sheet: 1/1
EasyEDA V4.9.3	Drawn By: Your Name