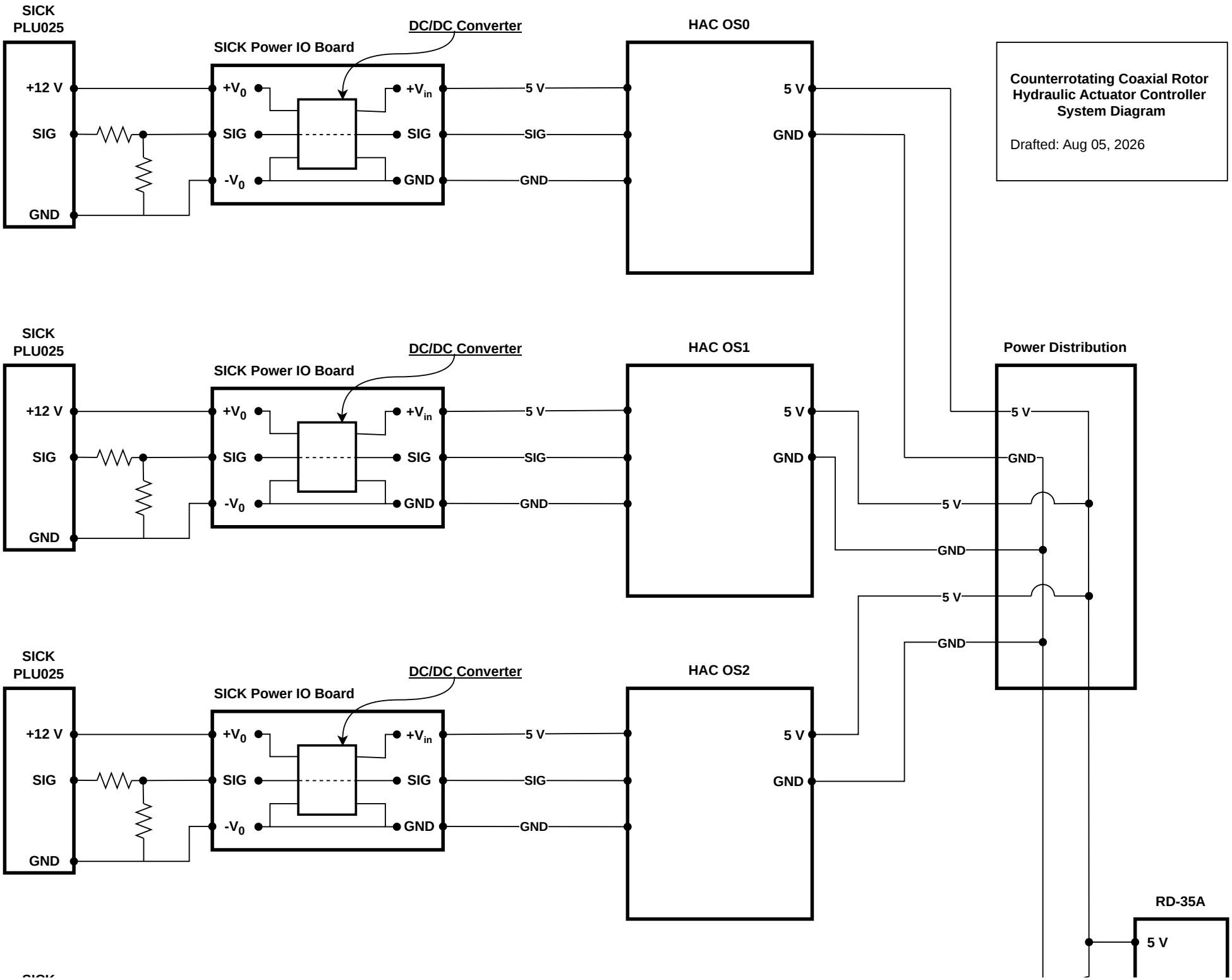
Counterrotating Coaxial Rotor Hydraulic Actuator Controller System Diagram
Drafted: Aug 05, 2026
SICK PLU025
+12 V
SIG
GND
SICK Power IO Board
DC/DC Converter
+V0
SIG
-V0
+Vin
SIG
GND
5 V
SIG
GND
HAC OS0
HAC OS1
HAC OS2
5 V
GND
Power Distribution
RD-35A

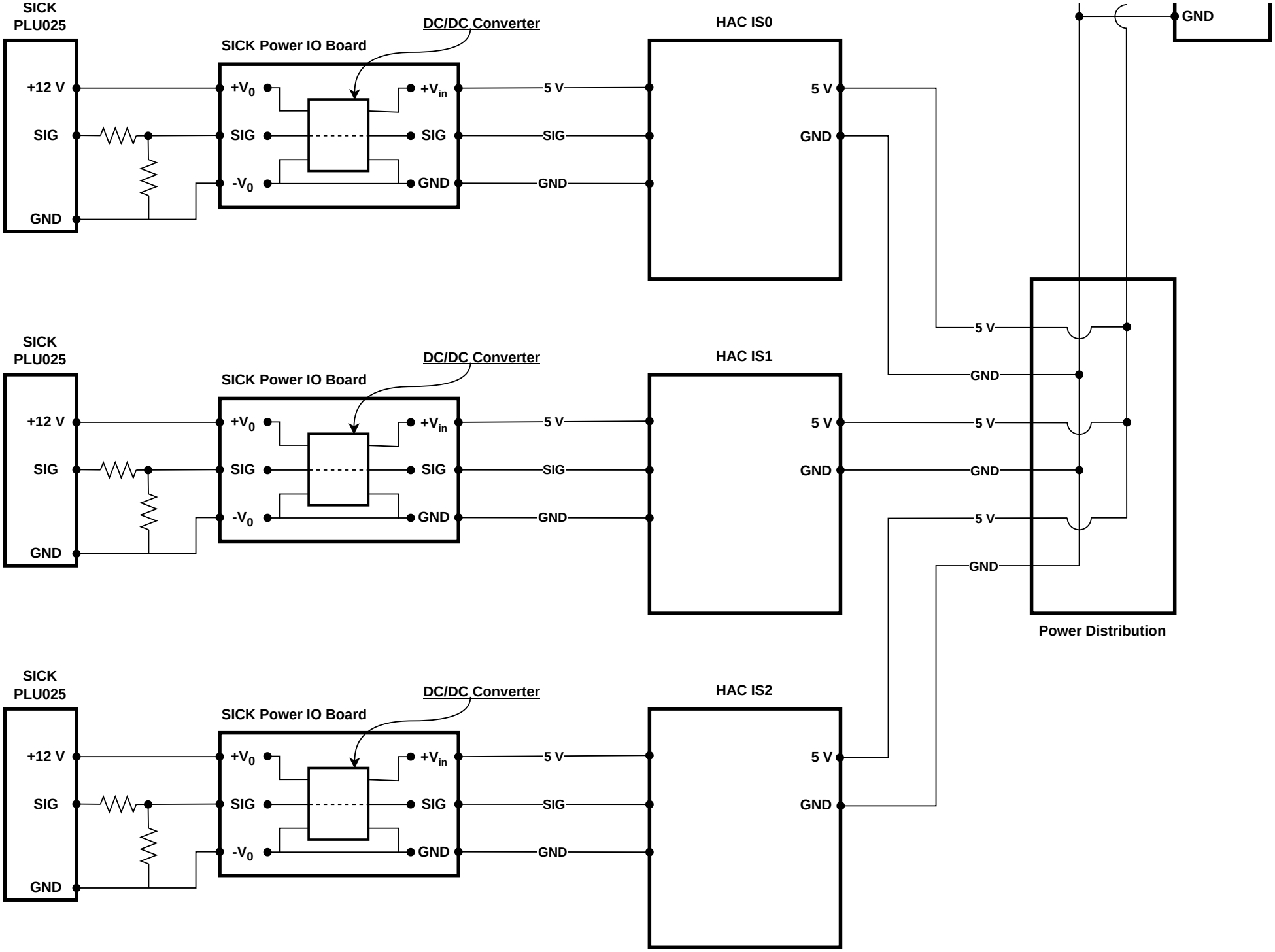
SICK
PLU025
+12 V
SIG
GND
SICK Power IO Board
DC/DC Converter
+V0
SIG
-V0
+Vin
SIG
GND
5 V
SIG
GND
HAC IS0
5 V
GND
HAC IS1
HAC IS2
GND
5 V
GND
5 V
GND
5 V
GND
Power Distribution