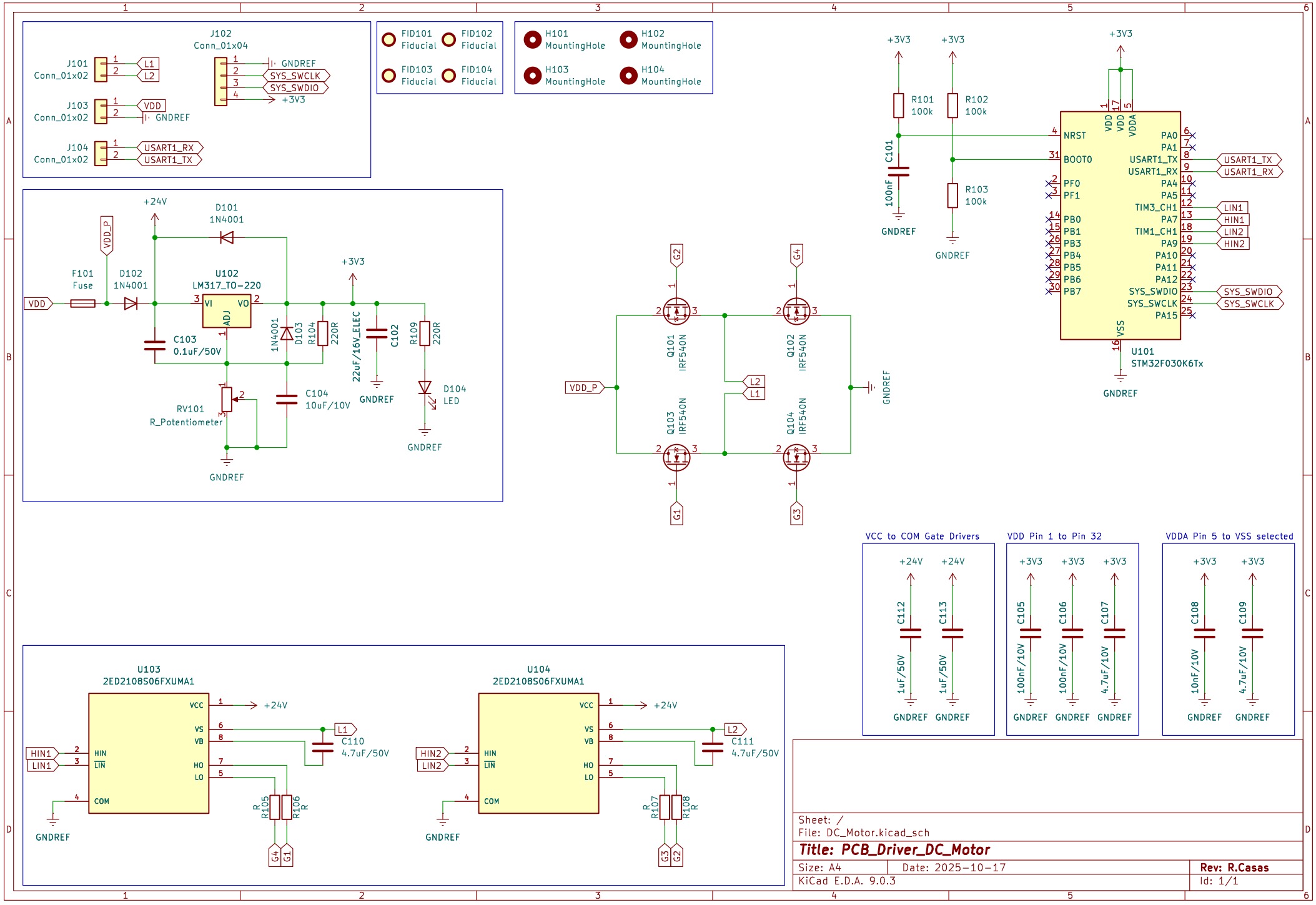

Sheet: /
File: DC_Motor.kicad_sch

Title: PCB_Driver_DC_Motor

Size: A4	Date: 2025-10-17	Rev: R.Casas
KiCad E.D.A. 9.0.3		Id: 1/1