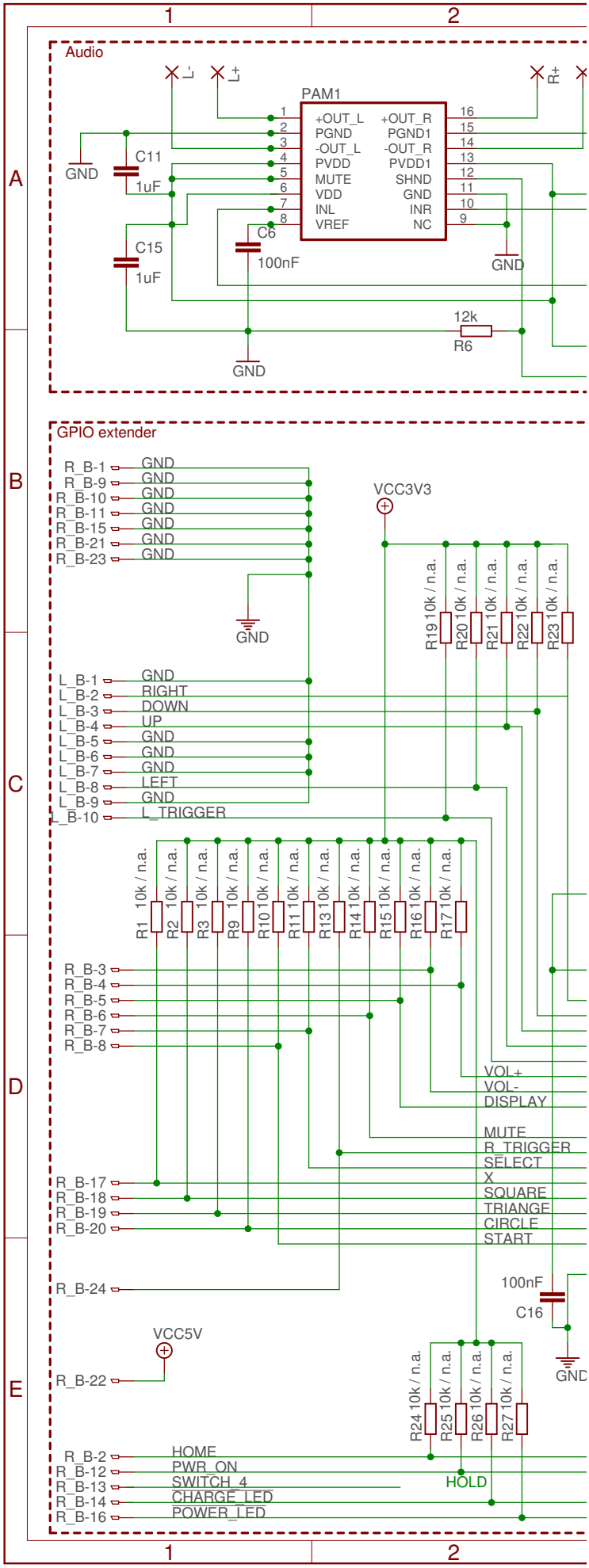
Audio
PAM1
+OUT_L
PGND
-OUT_L
PVDD
MUTE
VDD
INL
VREF
+OUT_R
PGND1
-OUT_R
PVDD1
SHND
GND
INR
NC
L-
L+
R+
C11
1uF
C15
1uF
C6
100nF
12k
R6
GND
GPIO extender
VCC3V3
R_B-1
R_B-9
R_B-10
R_B-11
R_B-15
R_B-21
R_B-23
L_B-1
L_B-2
L_B-3
L_B-4
L_B-5
L_B-6
L_B-7
L_B-8
L_B-9
L_B-10
RIGHT
DOWN
UP
LEFT
L_TRIGGER
R1 10k / n.a.
R2 10k / n.a.
R3 10k / n.a.
R9 10k / n.a.
R10 10k / n.a.
R11 10k / n.a.
R13 10k / n.a.
R14 10k / n.a.
R15 10k / n.a.
R16 10k / n.a.
R17 10k / n.a.
R19 10k / n.a.
R20 10k / n.a.
R21 10k / n.a.
R22 10k / n.a.
R23 10k / n.a.
R_B-3
R_B-4
R_B-5
R_B-6
R_B-7
R_B-8
R_B-17
R_B-18
R_B-19
R_B-20
R_B-24
VOL+
VOL-
DISPLAY
MUTE
R_TRIGGER
SELECT
X
SQUARE
TRIANGE
CIRCLE
START
100nF
C16
VCC5V
R_B-22
R24 10k / n.a.
R25 10k / n.a.
R26 10k / n.a.
R27 10k / n.a.
HOLD
R_B-2
R_B-12
R_B-13
R_B-14
R_B-16
HOME
PWR_ON
SWITCH_4
CHARGE_LED
POWER_LED

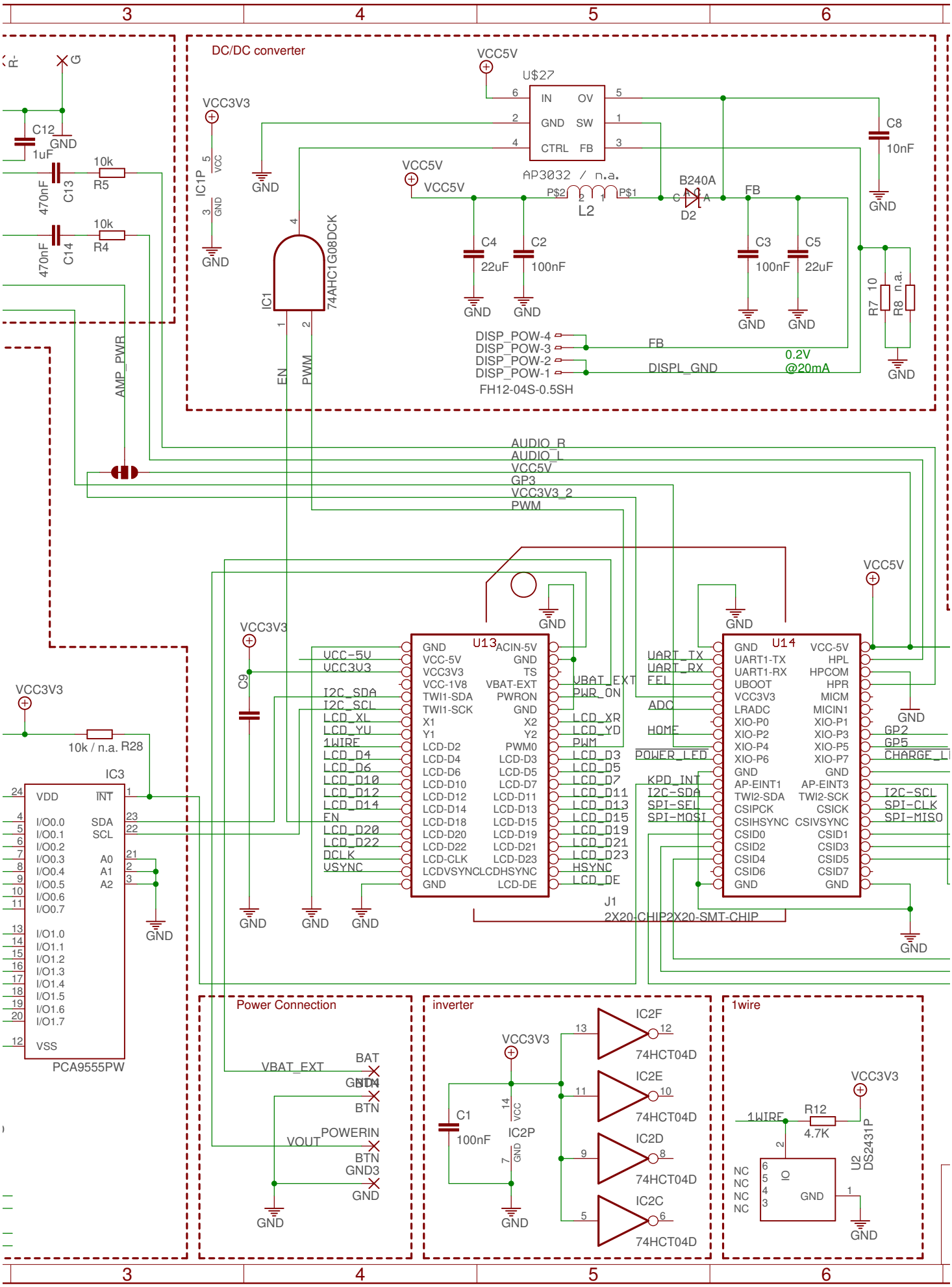
DC/DC converter
U$27
IN
OV
GND
SW
CTRL
FB
AP3032 / n.a.
L2
B240A
D2
C8
10nF
C12
1uF
10k
R5
470nF
C13
R4
C14
IC1P
VCC
GND
IC1
74AHC1G08DCK
EN
PWM
AMP_PWR
C4
22uF
C2
100nF
C3
C5
R7 10
R8 n.a.
DISP_POW-4
DISP_POW-3
DISP_POW-2
DISP_POW-1
FH12-04S-0.5SH
DISPL_GND
0.2V
@20mA
AUDIO_R
AUDIO_L
VCC5V
GP3
VCC3V3_2
PWM
U13
ACIN-5V
VCC-5V
VCC3V3
VCC-1V8
TWI1-SDA
TWI1-SCK
VBAT-EXT
PWRON
TS
X1
X2
Y1
Y2
LCD-D2
PWM0
LCD-D4
LCD-D3
LCD-D6
LCD-D5
LCD-D10
LCD-D7
LCD-D12
LCD-D11
LCD-D14
LCD-D13
LCD-D18
LCD-D15
LCD-D20
LCD-D19
LCD-D22
LCD-D21
LCD-CLK
LCD-D23
LCDVSYNC
LCDHSYNC
LCD-DE
VCC-5V
VCC3V3
I2C_SDA
I2C_SCL
LCD_XL
LCD_YU
1WIRE
LCD_D4
LCD_D6
LCD_D10
LCD_D12
LCD_D14
EN
LCD_D20
LCD_D22
DCLK
VSYNC
VBAT_EXT
PWR_ON
LCD_XR
LCD_YD
PWM
LCD_D3
LCD_D5
LCD_D7
LCD_D11
LCD_D13
LCD_D15
LCD_D19
LCD_D21
LCD_D23
HSYNC
LCD_DE
J1
2X20-CHIP2X20-SMT-CHIP
U14
UART1-TX
UART1-RX
UBOOT
VCC3V3
LRADC
XIO-P0
XIO-P2
XIO-P4
XIO-P6
AP-EINT1
TWI2-SDA
CSIPCK
CSIHSYNC
CSID0
CSID2
CSID4
CSID6
HPL
HPCOM
HPR
MICM
MICIN1
XIO-P1
XIO-P3
XIO-P5
XIO-P7
AP-EINT3
TWI2-SCK
CSICK
CSIVSYNC
CSID1
CSID3
CSID5
CSID7
UART_TX
UART_RX
FEL
ADC
HOME
POWER_LED
KPD_INT
I2C-SDA
SPI-SEL
SPI-MOSI
GP2
GP5
CHARGE_LI
I2C-SCL
SPI-CLK
SPI-MISO
IC3
VDD
INT
I/O0.0
I/O0.1
I/O0.2
I/O0.3
I/O0.4
I/O0.5
I/O0.6
I/O0.7
SDA
SCL
A0
A1
A2
I/O1.0
I/O1.1
I/O1.2
I/O1.3
I/O1.4
I/O1.5
I/O1.6
I/O1.7
VSS
PCA9555PW
10k / n.a. R28
C9
Power Connection
VBAT_EXT
BAT
BTN
VOUT
POWERIN
GND3
inverter
IC2F
IC2E
IC2D
IC2C
74HCT04D
C1
100nF
IC2P
1wire
1WIRE
R12
4.7K
U2
DS2431P
NC
IO
GND

(Sheet: 1/1)

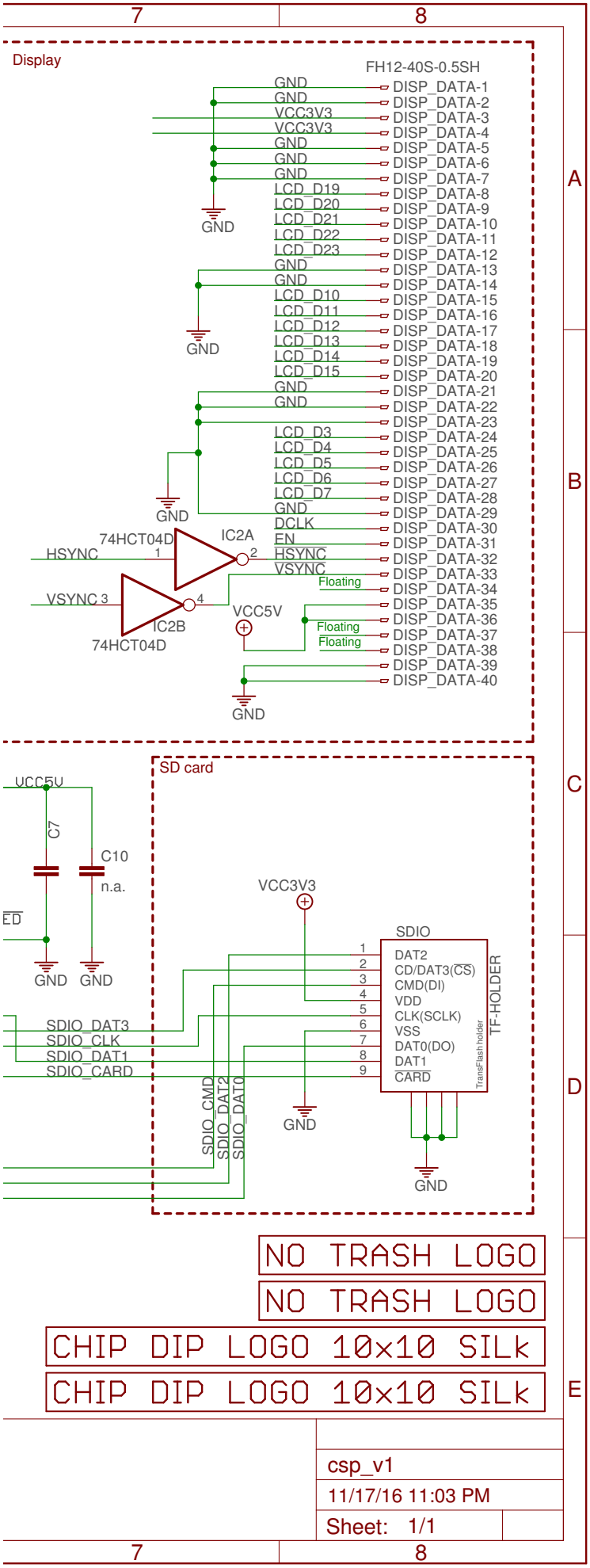
Display
FH12-40S-0.5SH
GND
GND
VCC3V3
VCC3V3
GND
GND
GND
LCD_D19
LCD_D20
LCD_D21
LCD_D22
LCD_D23
GND
GND
LCD_D10
LCD_D11
LCD_D12
LCD_D13
LCD_D14
LCD_D15
GND
GND
LCD_D3
LCD_D4
LCD_D5
LCD_D6
LCD_D7
GND
DCLK
EN
HSYNC
VSYNC
Floating
Floating
Floating
DISP_DATA-1
DISP_DATA-2
DISP_DATA-3
DISP_DATA-4
DISP_DATA-5
DISP_DATA-6
DISP_DATA-7
DISP_DATA-8
DISP_DATA-9
DISP_DATA-10
DISP_DATA-11
DISP_DATA-12
DISP_DATA-13
DISP_DATA-14
DISP_DATA-15
DISP_DATA-16
DISP_DATA-17
DISP_DATA-18
DISP_DATA-19
DISP_DATA-20
DISP_DATA-21
DISP_DATA-22
DISP_DATA-23
DISP_DATA-24
DISP_DATA-25
DISP_DATA-26
DISP_DATA-27
DISP_DATA-28
DISP_DATA-29
DISP_DATA-30
DISP_DATA-31
DISP_DATA-32
DISP_DATA-33
DISP_DATA-34
DISP_DATA-35
DISP_DATA-36
DISP_DATA-37
DISP_DATA-38
DISP_DATA-39
DISP_DATA-40
74HCT04D
IC2A
HSYNC
VSYNC
IC2B
74HCT04D
VCC5V
GND
SD card
VCC5V
C7
C10
n.a.
GND
GND
VCC3V3
SDIO
DAT2
CD/DAT3(CS)
CMD(DI)
VDD
CLK(SCLK)
VSS
DAT0(DO)
DAT1
CARD
TF-HOLDER
TransFlash holder
SDIO_DAT3
SDIO_CLK
SDIO_DAT1
SDIO_CARD
SDIO_CMD
SDIO_DAT2
SDIO_DAT0
GND
GND
NO TRASH LOGO
NO TRASH LOGO
CHIP DIP LOGO 10x10 SILk
CHIP DIP LOGO 10x10 SILk
csp_v1
11/17/16 11:03 PM
Sheet: 1/1