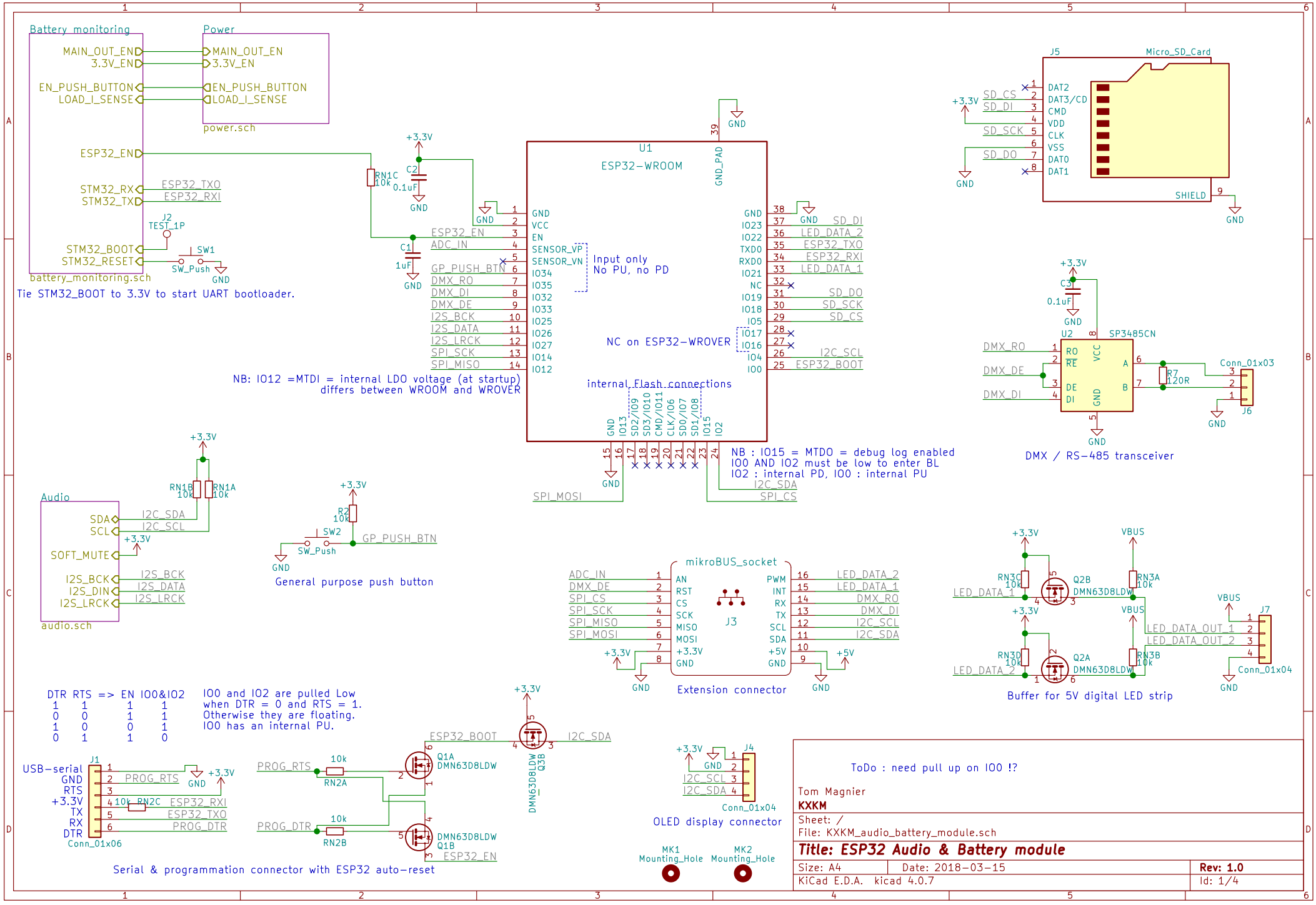
Battery monitoring
MAIN_OUT_EN
3.3V_EN
EN_PUSH_BUTTON
LOAD_I_SENSE
ESP32_EN
STM32_RX
STM32_TX
STM32_BOOT
STM32_RESET
battery_monitoring.sch
Power
power.sch
Tie STM32_BOOT to 3.3V to start UART bootloader.
U1
ESP32-WROOM
GND_PAD
Input only
No PU, no PD
NC on ESP32-WROVER
internal Flash connections
NB: IO12 =MTDI = internal LDO voltage (at startup)
differs between WROOM and WROVER
NB : IO15 = MTDO = debug log enabled
IO0 AND IO2 must be low to enter BL
IO2 : internal PD, IO0 : internal PU
J5
Micro_SD_Card
SHIELD
DMX / RS-485 transceiver
SP3485CN
Conn_01x03
Audio
audio.sch
General purpose push button
mikroBUS_socket
Extension connector
Buffer for 5V digital LED strip
Conn_01x04
DTR RTS => EN IO0&IO2
IO0 and IO2 are pulled Low
when DTR = 0 and RTS = 1.
Otherwise they are floating.
IO0 has an internal PU.
USB-serial
Conn_01x06
Serial & programmation connector with ESP32 auto-reset
OLED display connector
MK1
Mounting_Hole
MK2
Mounting_Hole
ToDo : need pull up on IO0 !?
Tom Magnier
KXKM
Sheet: /
File: KXKM_audio_battery_module.sch
Title: ESP32 Audio & Battery module
Size: A4
Date: 2018-03-15
Rev: 1.0
KiCad E.D.A. kicad 4.0.7
Id: 1/4

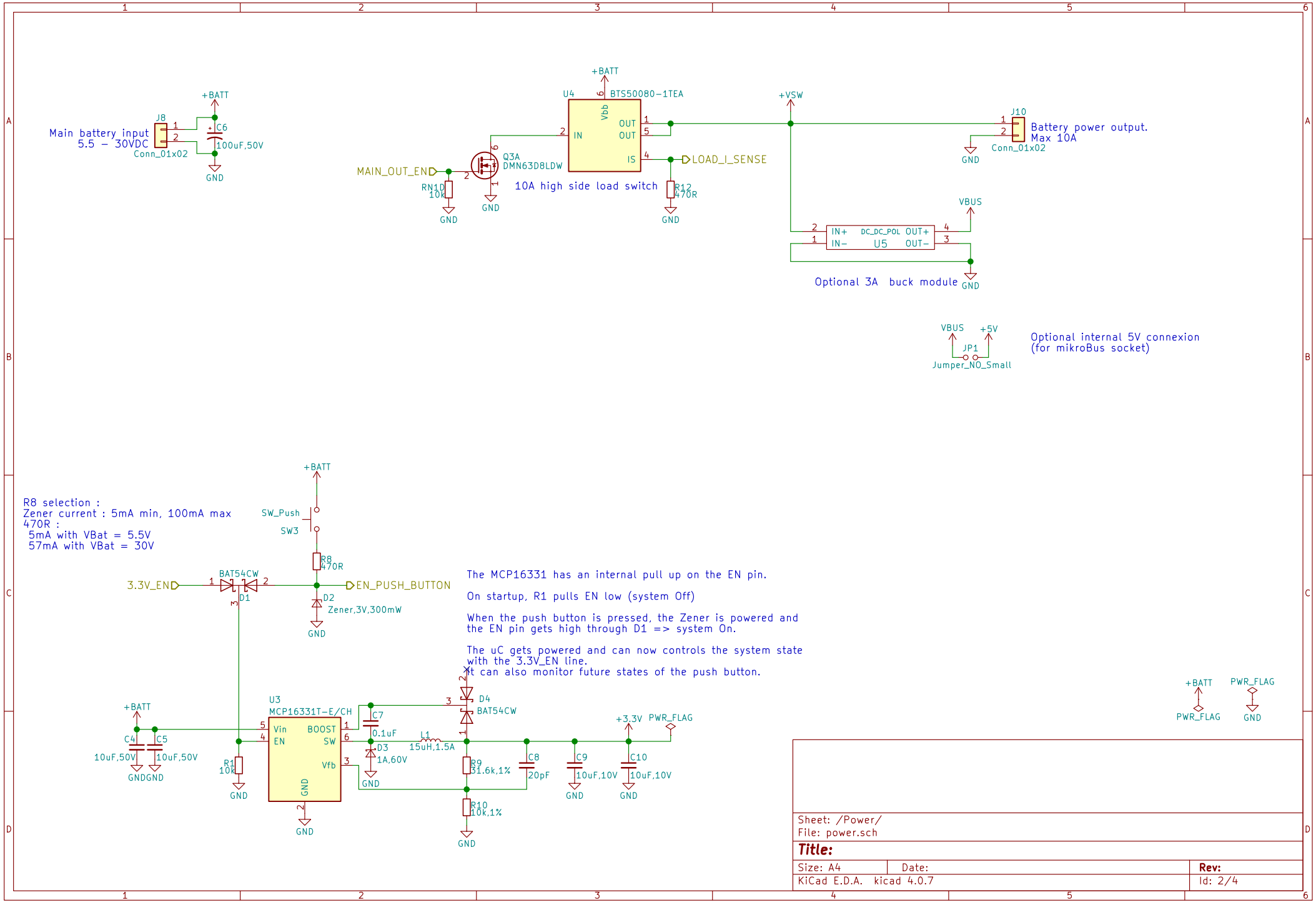

Sheet: /Power/
File: power.sch

Title:

Size: A4	Date:	Rev:
KiCad E.D.A. kicad 4.0.7		Id: 2/4

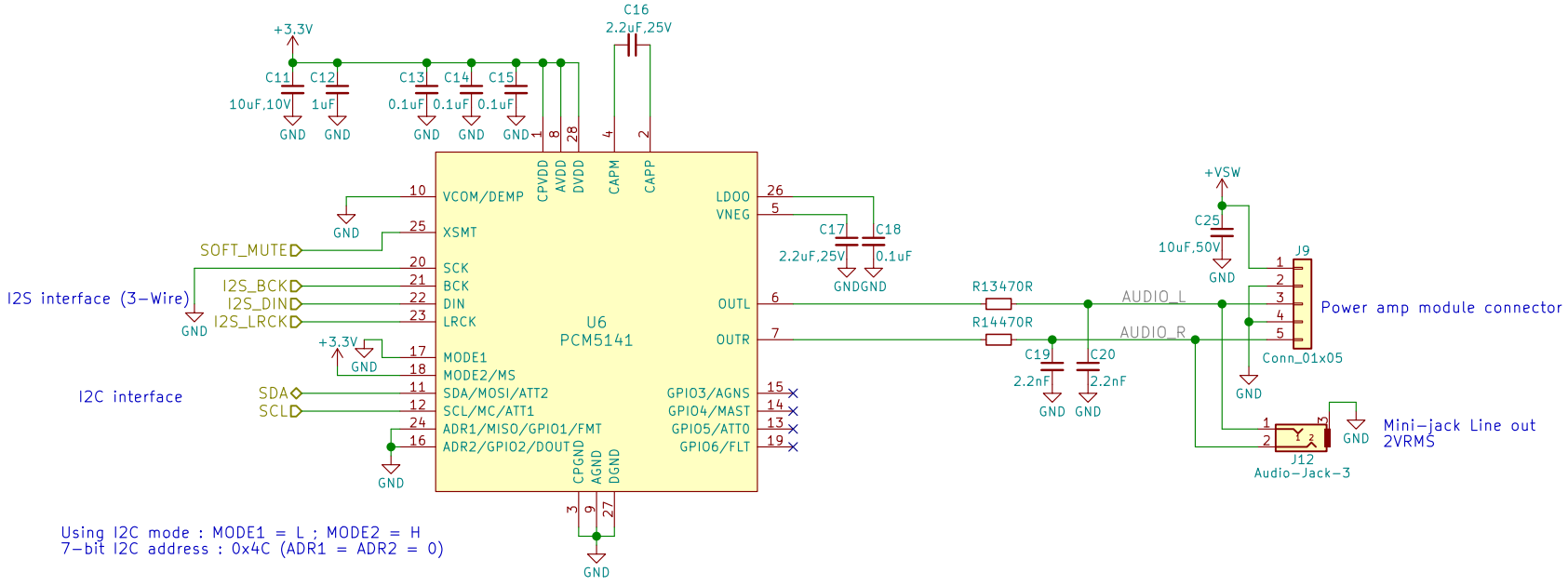

Sheet: /Audio/
File: audio.sch

Title:

Size: A4	Date:	Rev:
KiCad E.D.A. kicad 4.0.7		Id: 3/4

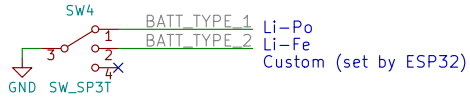

Battery type selector

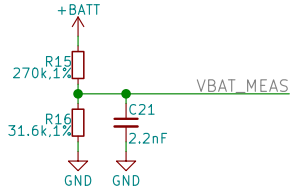

Battery voltage measurement
+BATT = 30V => 3.14V

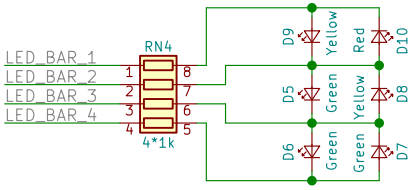

LED array for battery level display

Sheet: /Battery monitoring/
File: battery_monitoring.sch

Title:

Size: A4	Date:	**Rev:**
KiCad E.D.A. kicad 4.0.7		Id: 4/4