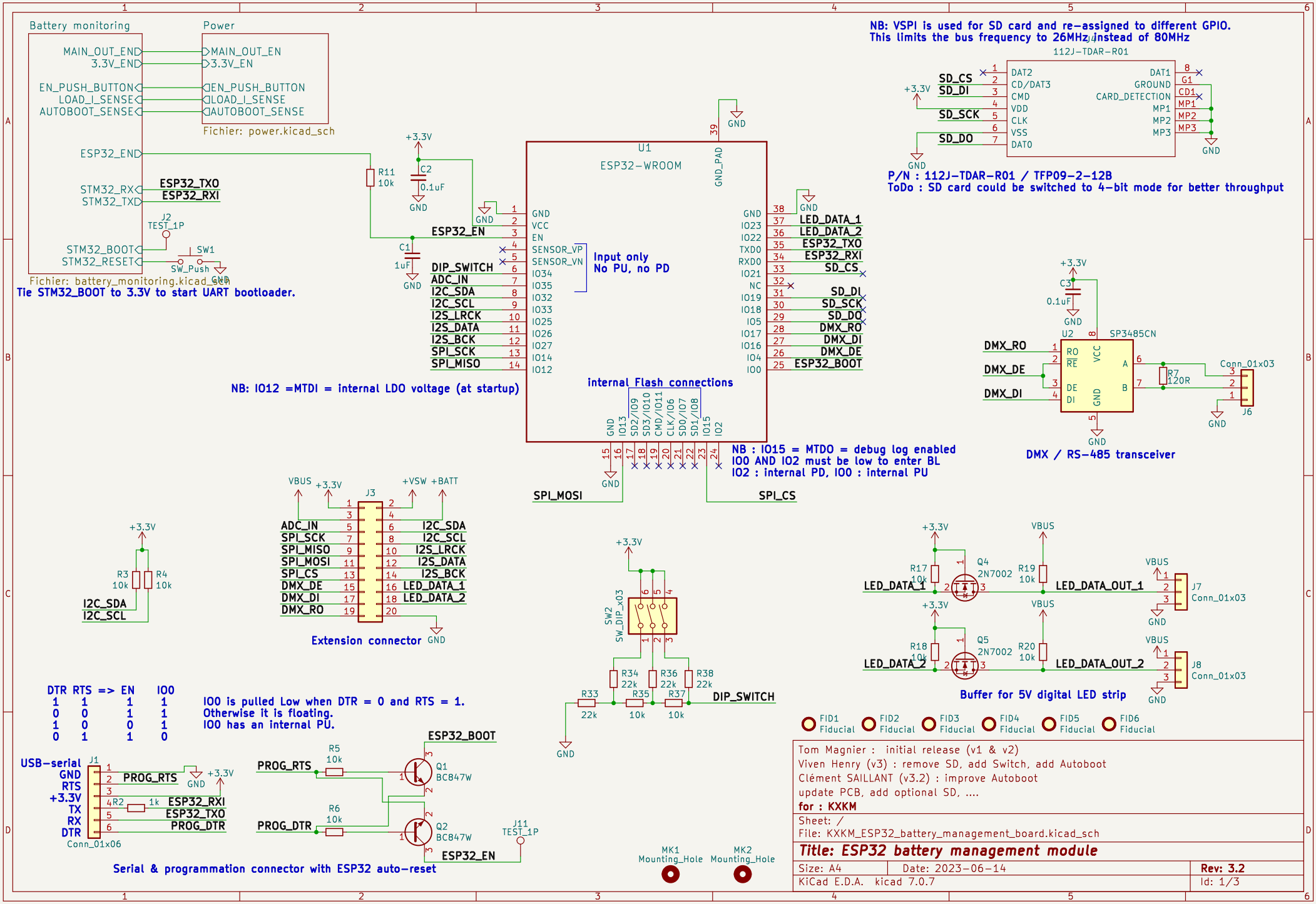
Battery monitoring
Power
MAIN_OUT_END
3.3V_END
EN_PUSH_BUTTON
LOAD_I_SENSE
AUTOBOOT_SENSE
MAIN_OUT_EN
3.3V_EN
EN_PUSH_BUTTON
LOAD_I_SENSE
AUTOBOOT_SENSE
Fichier: power.kicad_sch
ESP32_END
STM32_RX
STM32_TX
ESP32_TXO
ESP32_RXI
J2
TEST_1P
STM32_BOOT
STM32_RESET
SW1
SW_Push
Fichier: battery_monitoring.kicad_sch
Tie STM32_BOOT to 3.3V to start UART bootloader.
R11
10k
+3.3V
C2
0.1uF
GND
C1
1uF
ESP32_EN
DIP_SWITCH
ADC_IN
I2C_SDA
I2C_SCL
I2S_LRCK
I2S_DATA
I2S_BCK
SPI_SCK
SPI_MISO
U1
ESP32-WROOM
GND_PAD
GND
VCC
EN
SENSOR_VP
SENSOR_VN
IO34
IO35
IO32
IO33
IO25
IO26
IO27
IO14
IO12
Input only
No PU, no PD
IO23
IO22
TXD0
RXD0
IO21
NC
IO19
IO18
IO5
IO17
IO16
IO4
IO0
LED_DATA_1
LED_DATA_2
ESP32_TXO
ESP32_RXI
SD_CS
SD_DI
SD_SCK
SD_DO
DMX_RO
DMX_DI
DMX_DE
ESP32_BOOT
internal Flash connections
GND
IO13
SD2/IO9
SD3/IO10
CMD/IO11
CLK/IO6
SD0/IO7
SD1/IO8
IO15
IO2
SPI_MOSI
SPI_CS
NB: IO12 =MTDI = internal LDO voltage (at startup)
NB : IO15 = MTDO = debug log enabled
IO0 AND IO2 must be low to enter BL
IO2 : internal PD, IO0 : internal PU
NB: VSPI is used for SD card and re-assigned to different GPIO.
This limits the bus frequency to 26MHz instead of 80MHz
112J-TDAR-R01
DAT2
CD/DAT3
CMD
VDD
CLK
VSS
DAT0
DAT1
GROUND
CARD_DETECTION
MP1
MP2
MP3
P/N : 112J-TDAR-R01 / TFP09-2-12B
ToDo : SD card could be switched to 4-bit mode for better throughput
C3
0.1uF
U2
SP3485CN
RO
RE
DE
DI
VCC
A
B
R7
120R
Conn_01x03
J6
DMX / RS-485 transceiver
R3
10k
R4
10k
I2C_SDA
I2C_SCL
J3
VBUS
+VSW
+BATT
ADC_IN
SPI_SCK
SPI_MISO
SPI_MOSI
SPI_CS
DMX_DE
DMX_DI
DMX_RO
I2C_SDA
I2C_SCL
I2S_LRCK
I2S_DATA
I2S_BCK
LED_DATA_1
LED_DATA_2
Extension connector
SW2
SW_DIP_x03
R34
22k
R36
22k
R38
22k
R33
22k
R35
10k
R37
10k
DIP_SWITCH
R17
10k
Q4
2N7002
R19
10k
LED_DATA_1
LED_DATA_OUT_1
J7
Conn_01x03
R18
10k
Q5
2N7002
R20
10k
LED_DATA_2
LED_DATA_OUT_2
J8
Conn_01x03
Buffer for 5V digital LED strip
FID1 Fiducial
FID2 Fiducial
FID3 Fiducial
FID4 Fiducial
FID5 Fiducial
FID6 Fiducial
DTR RTS => EN IO0
1 1 1 1
0 0 1 1
1 0 0 1
0 1 1 0
IO0 is pulled Low when DTR = 0 and RTS = 1.
Otherwise it is floating.
IO0 has an internal PU.
USB-serial
J1
GND
RTS
+3.3V
TX
RX
DTR
PROG_RTS
R2
1k
ESP32_RXI
ESP32_TXO
PROG_DTR
Conn_01x06
R5
10k
R6
10k
Q1
BC847W
Q2
BC847W
ESP32_BOOT
ESP32_EN
J11
TEST_1P
Serial & programmation connector with ESP32 auto-reset
MK1
Mounting_Hole
MK2
Mounting_Hole
Tom Magnier : initial release (v1 & v2)
Viven Henry (v3) : remove SD, add Switch, add Autoboot
Clément SAILLANT (v3.2) : improve Autoboot
update PCB, add optional SD, ...
for : KXKM
Sheet: /
File: KXKM_ESP32_battery_management_board.kicad_sch
Title: ESP32 battery management module
Size: A4
Date: 2023-06-14
Rev: 3.2
KiCad E.D.A. kicad 7.0.7
Id: 1/3

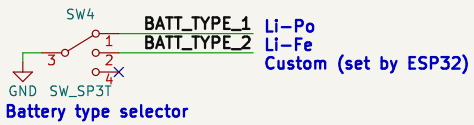

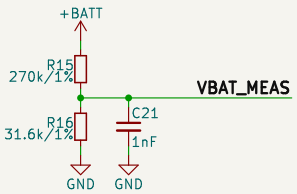

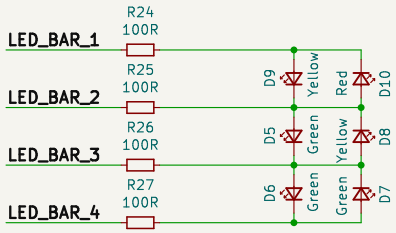

Tom Magnier : initial release (v1 & v2)
Viven Henry (v3) : remove SD, add Switch, add Autoboot
Clément SAILLANT (v3.2) : improve Autoboot
update PCB, add optional SD, ...
for : KXKM

Sheet: /Battery monitoring/
File: battery_monitoring.kicad_sch

Title: ESP32 battery management module

Size: A4	Date: 2023-06-14	**Rev: 3.2**
KiCad E.D.A. kicad 7.0.7		Id: 2/3

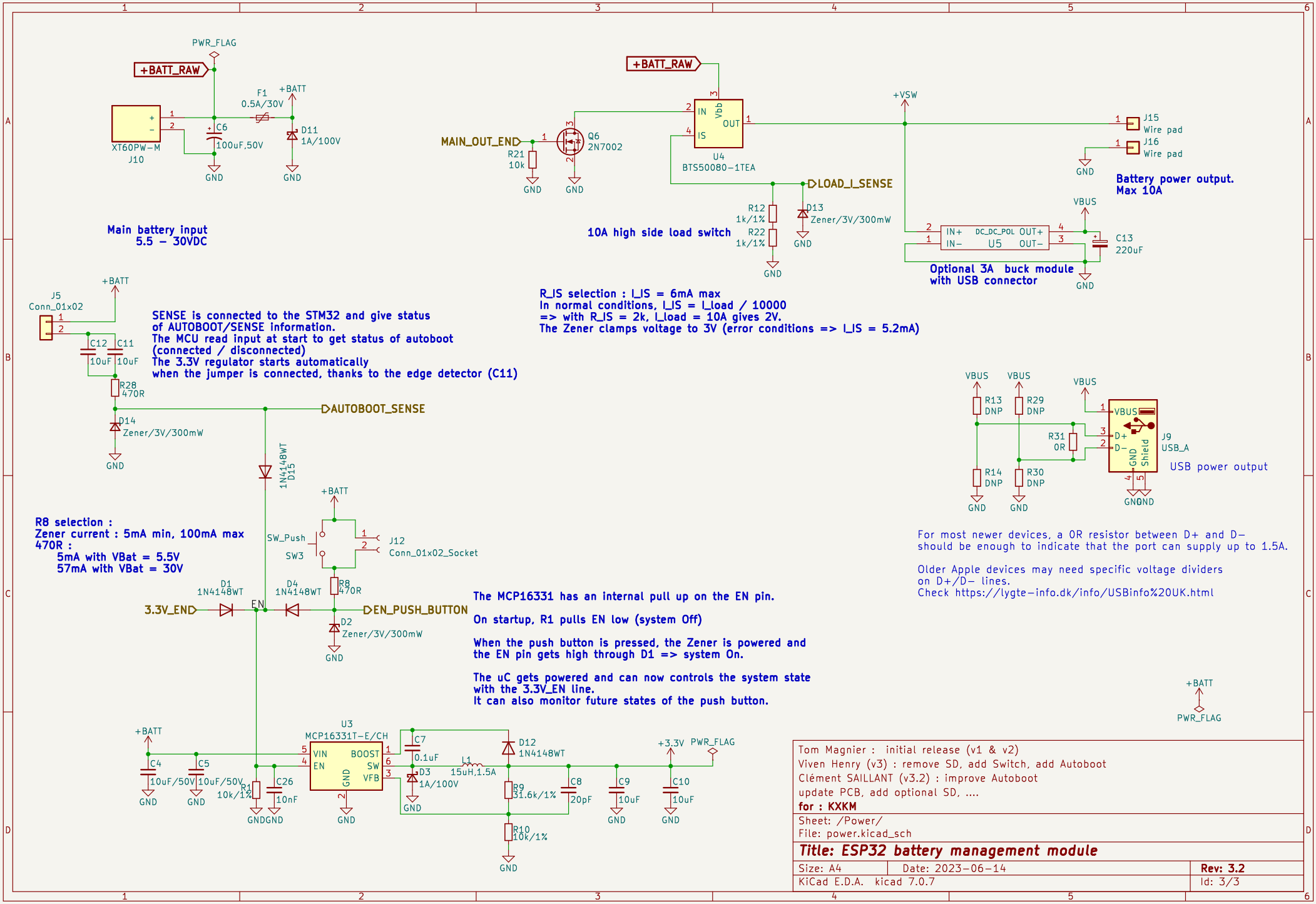

Tom Magnier : initial release (v1 & v2)
Viven Henry (v3) : remove SD, add Switch, add Autoboot
Clément SAILLANT (v3.2) : improve Autoboot
update PCB, add optional SD, ...
for : KXKM

Sheet: /Power/
File: power.kicad_sch

Title: ESP32 battery management module

Size: A4	Date: 2023-06-14	**Rev: 3.2**
KiCad E.D.A. kicad 7.0.7		Id: 3/3