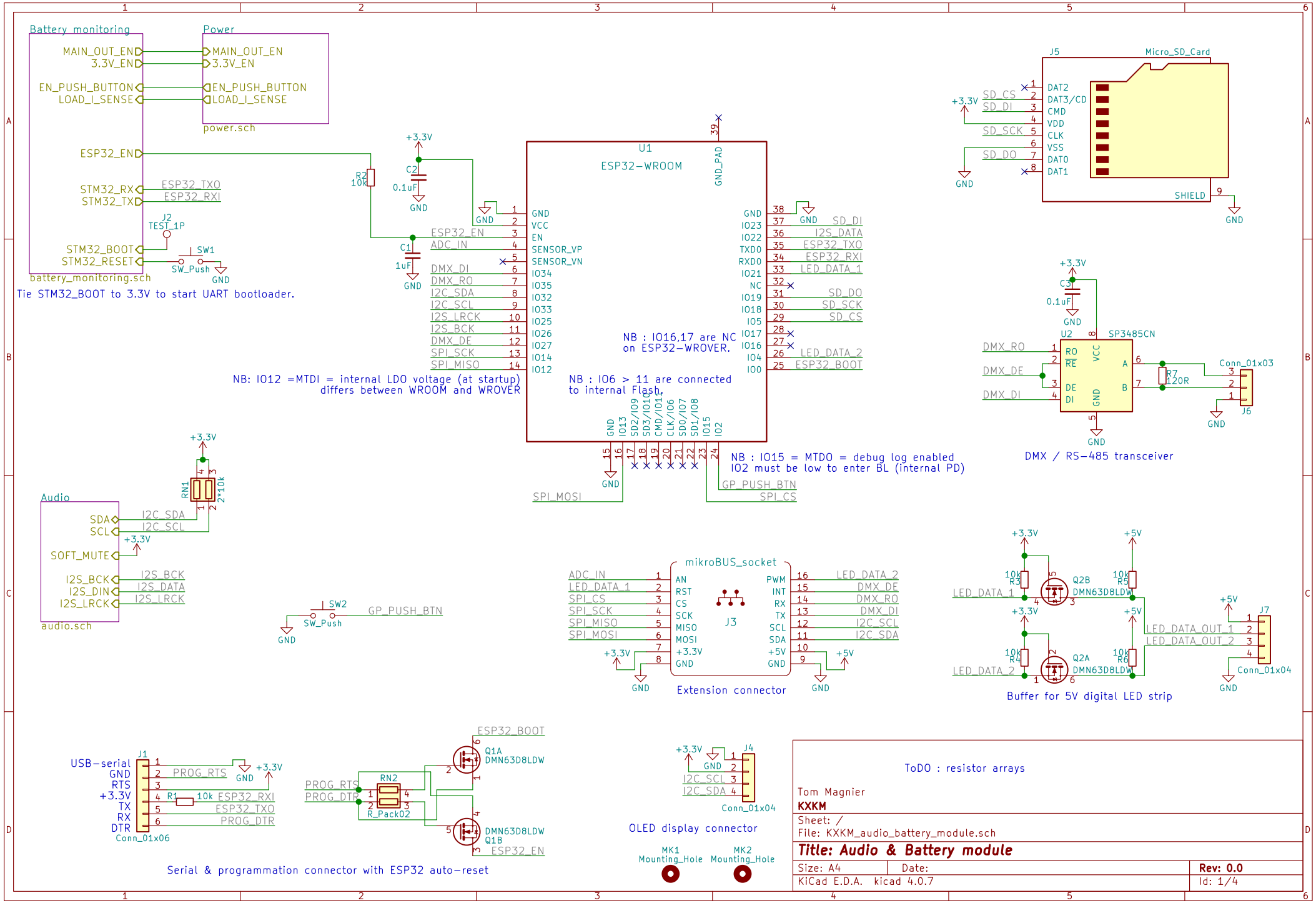
Battery_monitoring
MAIN_OUT_EN
3.3V_EN
EN_PUSH_BUTTON
LOAD_I_SENSE
ESP32_EN
STM32_RX
STM32_TX
STM32_BOOT
STM32_RESET
battery_monitoring.sch
Power
power.sch
ESP32_TXO
ESP32_RXI
J2
TEST_1P
SW1
SW_Push
GND
Tie STM32_BOOT to 3.3V to start UART bootloader.
+3.3V
R2
10k
C2
0.1uF
C1
1uF
U1
ESP32-WROOM
GND_PAD
GND
VCC
EN
SENSOR_VP
SENSOR_VN
IO34
IO35
IO32
IO33
IO25
IO26
IO27
IO14
IO12
ADC_IN
DMX_DI
DMX_RO
I2C_SDA
I2C_SCL
I2S_LRCK
I2S_BCK
DMX_DE
SPI_SCK
SPI_MISO
IO23
IO22
TXD0
RXD0
IO21
NC
IO19
IO18
IO5
IO17
IO16
IO4
IO0
I2S_DATA
LED_DATA_1
LED_DATA_2
ESP32_BOOT
SD_DI
SD_DO
SD_SCK
SD_CS
NB : IO16,17 are NC on ESP32-WROVER.
NB: IO12 =MTDI = internal LDO voltage (at startup) differs between WROOM and WROVER
NB : IO6 > 11 are connected to internal Flash.
IO13
SD2/IO9
SD3/IO10
CMD/IO11
CLK/IO6
SD0/IO7
SD1/IO8
IO15
IO2
SPI_MOSI
GP_PUSH_BTN
SPI_CS
NB : IO15 = MTDO = debug log enabled
IO2 must be low to enter BL (internal PD)
J5
Micro_SD_Card
DAT2
DAT3/CD
CMD
VDD
CLK
VSS
DAT0
DAT1
SHIELD
C3
U2
SP3485CN
RO
RE
DE
DI
VCC
A
B
R7
120R
Conn_01x03
J6
DMX / RS-485 transceiver
Audio
SDA
SCL
SOFT_MUTE
I2S_BCK
I2S_DIN
I2S_LRCK
I2S_DATA
audio.sch
RN1
2*10k
SW2
SW_Push
GP_PUSH_BTN
mikroBUS_socket
AN
RST
CS
SCK
MISO
MOSI
PWM
INT
RX
TX
J3
Extension connector
R3
R4
R5
R6
Q2B
Q2A
DMN63D8LDW
LED_DATA_OUT_1
LED_DATA_OUT_2
J7
Conn_01x04
Buffer for 5V digital LED strip
USB-serial
J1
PROG_RTS
PROG_DTR
R1
10k
Conn_01x06
RN2
R_Pack02
Q1A
Q1B
DMN63D8LDW
Serial & programmation connector with ESP32 auto-reset
J4
Conn_01x04
OLED display connector
MK1
Mounting_Hole
MK2
Mounting_Hole
ToDO : resistor arrays
Tom Magnier
KXKM
Sheet: /
File: KXKM_audio_battery_module.sch
Title: Audio & Battery module
Size: A4
Date:
Rev: 0.0
KiCad E.D.A. kicad 4.0.7
Id: 1/4

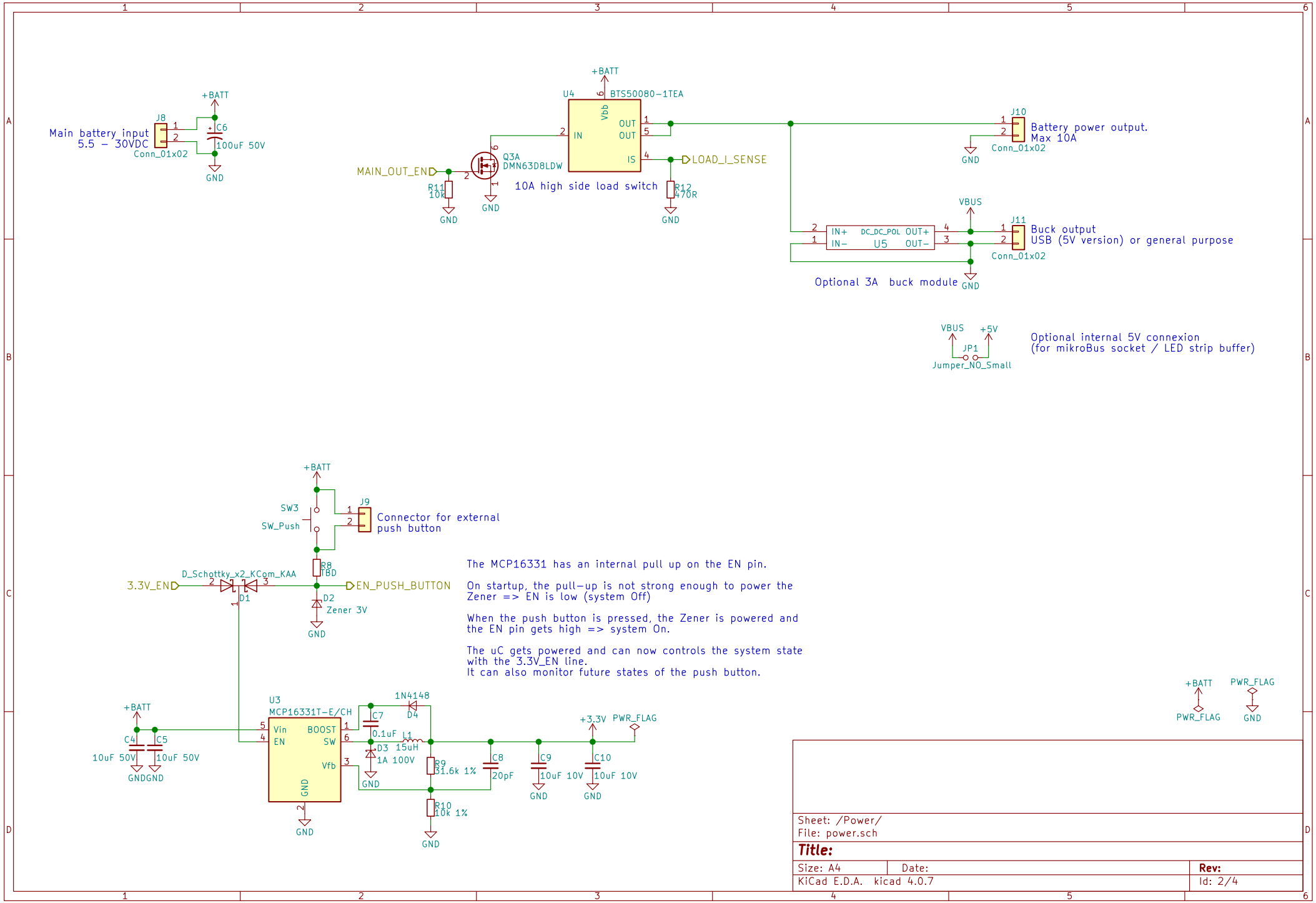

Sheet: /Power/
File: power.sch

Title:

Size: A4	Date:	Rev:
KiCad E.D.A. kicad 4.0.7		Id: 2/4

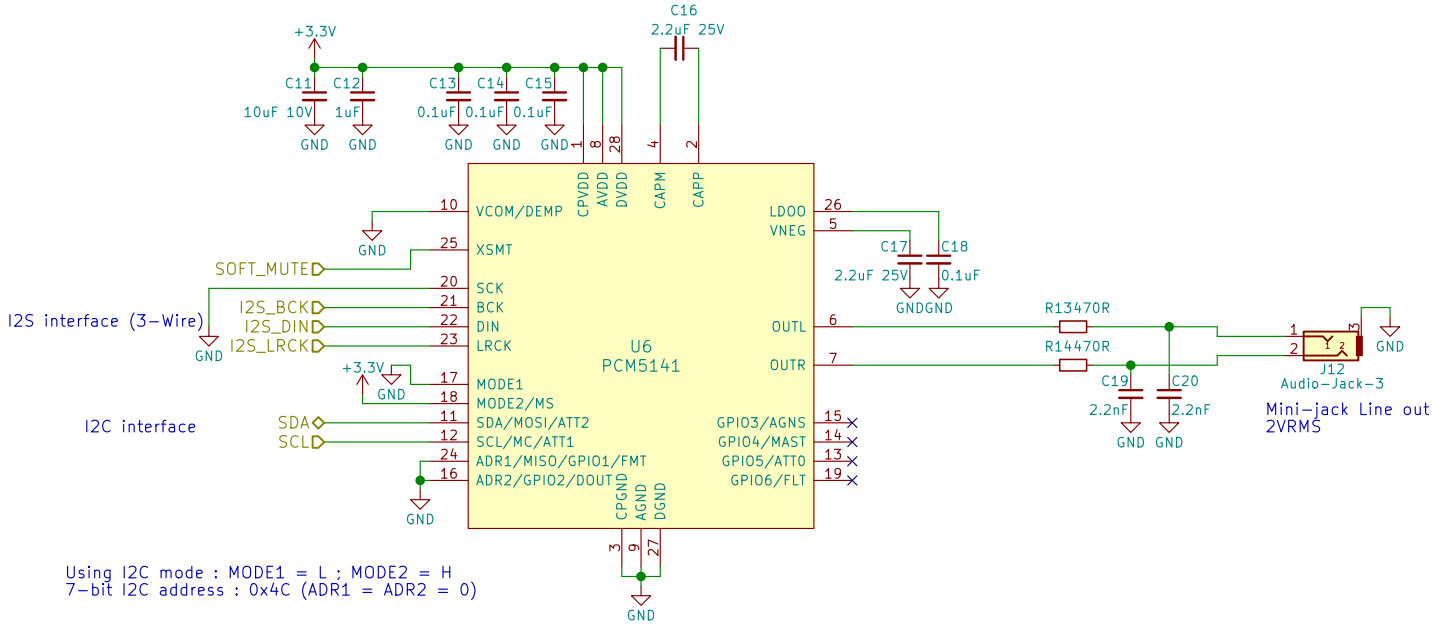

Sheet: /Audio/
File: audio.sch

Title:

Size: A4	Date:	Rev:
KiCad E.D.A. kicad 4.0.7		Id: 3/4

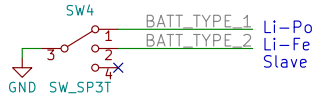

Battery type selector

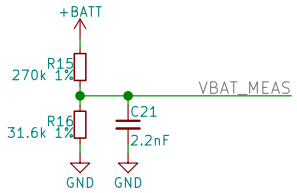

Battery voltage measurement
+BATT = 30V => 3.14V

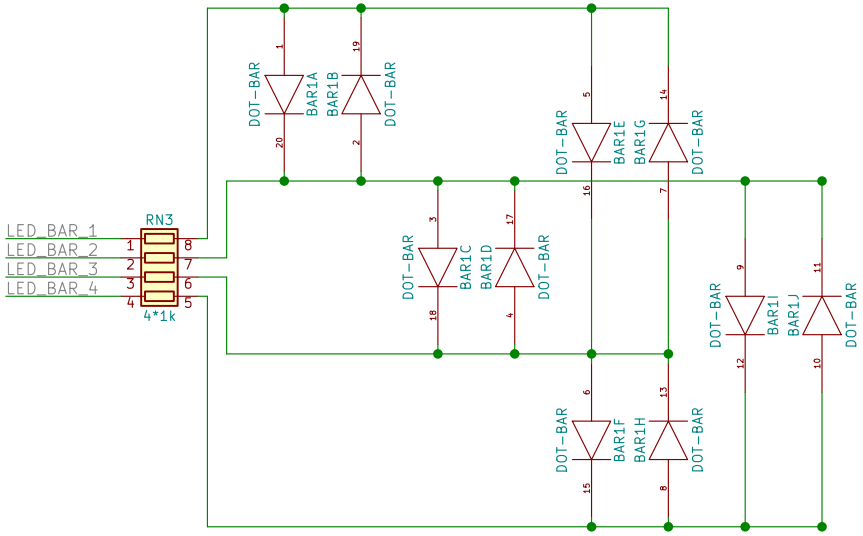

Charlieplexed LED bar
for battery level display

Sheet: /Battery monitoring/
File: battery_monitoring.sch

Title:

Size: A4	Date:	**Rev:**
KiCad E.D.A. kicad 4.0.7		Id: 4/4