THIS DRAWING IS UNPUBLISHED. RELEASED FOR PUBLICATION -,- .
© COPYRIGHT - BY TYCO ELECTRONICS CORPORATION. ALL RIGHTS RESERVED.

LOC	DIST
GP	00

REVISIONS

P	LTR	DESCRIPTION	DATE	DWN	APVD
	A	REVISED PER ECO-09-005756	15APR2009	ZMR	SLB

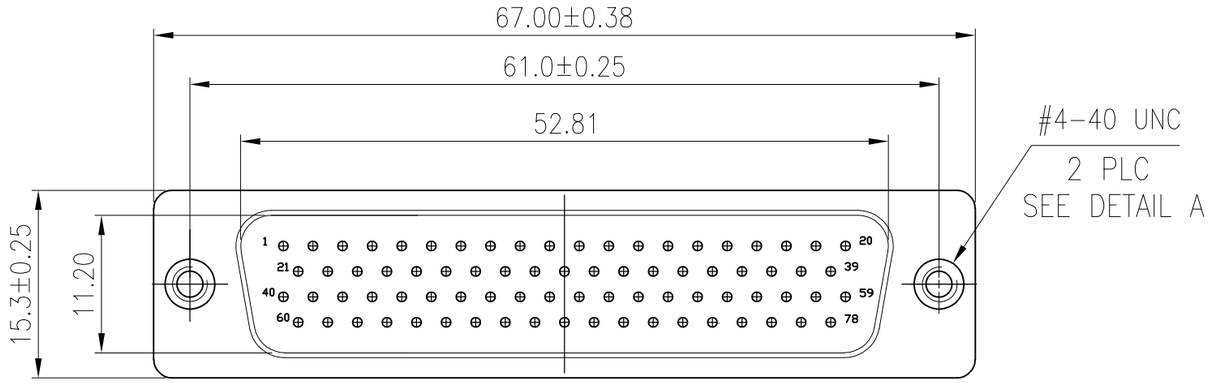

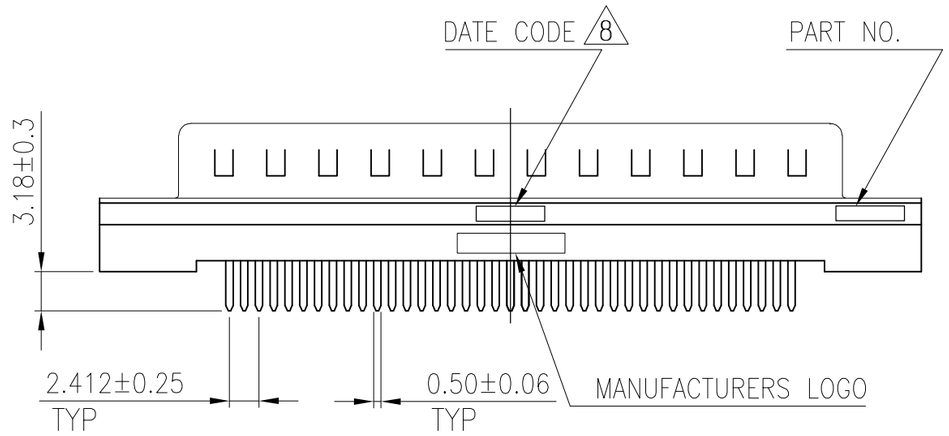

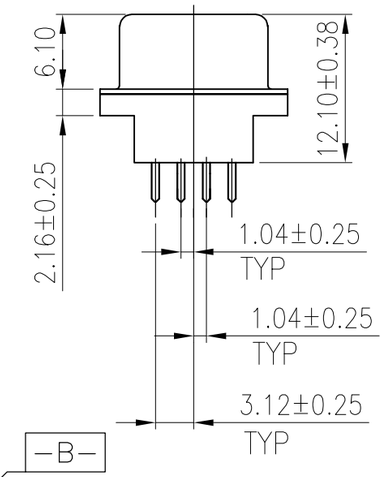

1. Housing material: PBT , Glass Filled, black, UL 94V-0 Rated.
2. CONTACT MATERIAL: PHOSPHOR BRONZE.
3. CONTACT FINISH: GOLD PLATE IN MATING AREA (SEE TABLE), 120µ" MIN TIN PLATE ON SOLDER TAIL, BOTH OVER 50µ" MIN NICKEL UNDERPLATE.
4. SHELL: STEEL, NICKEL PLATE.
5. BOARDLOCK: BRASS, 100µ" MIN TIN PLATE.
6. THREADED INSERTS: BRASS, NICKEL PLATE.
7. PACKAGE IN TRAYS.

8 FOUR DIGIT DATE CODE IN THIS FORMAT.

01 45
Year — Manufacturing Week

9 DATUMS -X- & -Y- TO BE ESTABLISHED BY CUSTOMER.

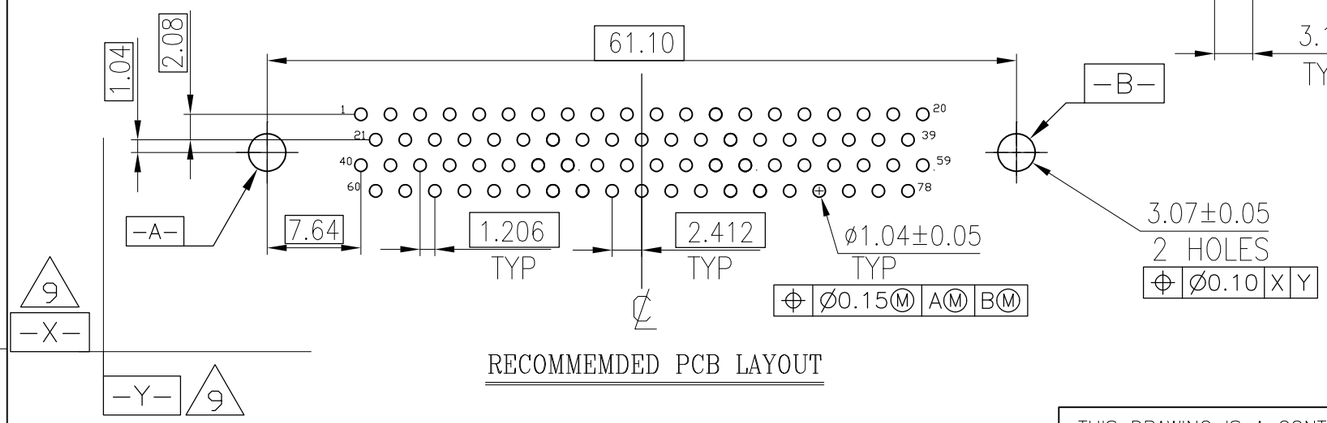

RECOMMEMDED PCB LAYOUT

OBSOLETE	Gold flash	5749019-6
OBSOLETE	15µ" MIN	5749019-5
	30µ" MIN	5749019-1
	CONTACT MATING AREA FINISH	Part Number

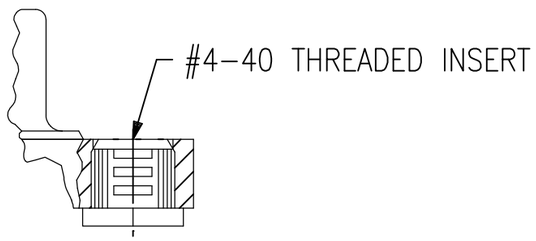

Detail A

THIS DRAWING IS A CONTROLLED DOCUMENT.

DIMENSIONS: mm

TOLERANCES UNLESS OTHERWISE SPECIFIED:

0 PLC	± -
1 PLC	± -
2 PLC	± 0.2
3 PLC	± 0.1
4 PLC	± -
ANGLES	± -

MATERIAL: SEE NOTES
FINISH: SEE NOTES

DWN	B. MCMASTER	21SEP05
CHK	S. BOLASH	21SEP05
APVD	M.WALMSLEY	21SEP05
PRODUCT SPEC	—	
APPLICATION SPEC	—	
WEIGHT	—	

Tyco Electronics
Tyco Electronics Corporation
Harrisburg, PA 17105-3608

NAME: PLUG ASSEMBLY, SIZE 5, 78 POS, VERTICAL, FRONT METAL SHELL, WITH THREADED INSERTS, AMPLIMITE HD-22

SIZE	CAGE CODE	DRAWING NO	RESTRICTED TO
A3	00779	C-5749019	—

CUSTOMER DRAWING | SCALE 2:1 | SHEET 1 OF 1 | REV A