Chapter 1

Atomic and Molecular Mass

1.1 Reading a Periodic Tile

Let's look at the different information shown on a periodic tile:

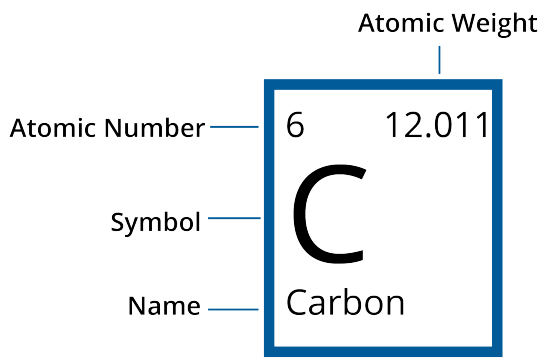

The four things we learn from a periodic tile are:

1. the symbol: as discussed in the previous chapter, each element has a unique symbol. Element symbols are used when showing the structure of a molecule and modeling chemical reactions.
2. the atomic number: this is also unique for each element. Take a look at the periodic table a few pages forward. Every tile has a unique atomic number, and the tiles are laid out in a generally increasing atomic number (you'll learn why the periodic table is arranged this way in Sequence 2).
3. the atomic weight: this is the average mass of all the atoms of that element in existence. Just like your overall grade in a class is the weighted average of all the individual grades you earned, atomic weight is the weighted average of the masses of all the individual atoms of that element. This is also sometimes referred to as atomic mass.

4. the name: not all periodic tables show the name of an element on its tile. This is why it is useful to know the symbols of common elements.

Recall from the previous chapter that we classify atoms by the number of protons they have. What this means is that if we want to know what element an atom is, we have to look at the number of protons. Take a look at the three carbon atoms below and note what is the same and what is different among them:

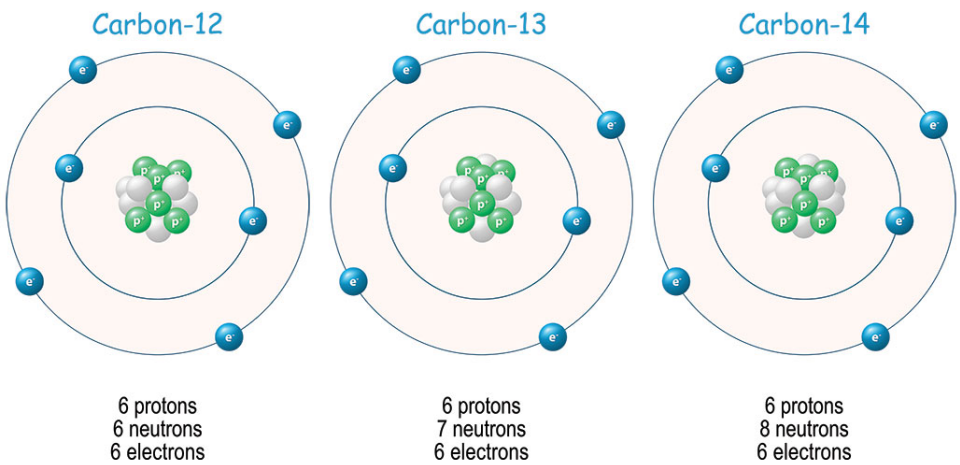

These different versions of carbon all have 6 protons, which is also carbon's atomic number. This isn't a coincidence: the atomic number *is* the number of protons in every atom of an element. If I tell you an atom has 4 protons, you would find atomic number 4 and see that the element is beryllium. To know how many protons an oxygen atom has, you would find its tile and see that it has atomic number 8.

Ok, so now we know atoms of the same element have the same number of protons, and that number is given by the element's atomic number. The difference between these carbon atoms explains the other number on a periodic tile: the atomic mass.

A proton and a neutron have about the same mass. An electron, on the other hand, has much less mass: One neutron weighs about the same amount as 2000 electrons. This means that the mass of any object comes mostly from the protons and neutrons in the nucleus of its atoms.

We know how many protons an atom has by what element it is, but how do we know the number of neutrons?

1.2 Mass of Atoms and Molecules

As you've seen, a periodic tile for an element tells us the average mass of an atom of that element in Daltons or amus (atomic mass units). The average mass of a carbon atom is 12.011 amu, and the average mass of an iron atom is 55.845 amu. Using the periodic table, determining the average mass of an atom is straightforward. What about molecules?

Consider water: H_2O. It is made of 2 hydrogen atoms, each with an average mass of 1.008 amu, and one oxygen atom, with an average mass of 15.999 amu. To find the mass of the molecule, called *molecular mass*, you simply add the masses of each of the atoms in the molecule. So, the molecular mass of water is 1.008 amu + 1.008 amu + 15.999 amu = 18.015 amu.

Exercise 1 Determining Molecular Mass

Find the molecular mass, in amu, of the following substances:

1. CH_4
2. $CuSO_4$
3. $C_6H_{12}O_6$

Working Space

Answer on Page 15

1.3 Mole Concept

An atomic mass unit is a very, very, very small unit; we would much rather work in grams. Grams are a large enough unit that you can develop a natural sense for how much a gram is. Additionally, while you can't see a single carbon atom with your eyes, you can see 10 grams of carbon (about enough to fill a pen cap). To convert between the very, very, very small unit of amus to the tangible unit of grams, we use *Avogadro's Number* (sometimes called *Avogadro's Constant*).

Since 1 amu is defined as $1/12^{\text{th}}$ of the mass of a carbon-12 atom, carbon-12 by definition has a mass of 12 amu. Additionally, Avogadro's number is the number of carbon atoms in 12.000 grams of pure carbon-12. This amount is called *a mole*. If you have 12 doughnuts, that's a dozen doughnuts. If you have 20 donuts, you have a score of donuts. 500 donuts: a ream of donuts. If you have $6.02214076 \times 10^{23}$ doughnuts, you have a *mole* of doughnuts.

This isn't really a practical measurement, as a mole of doughnuts would be about the size of the earth. We use moles for small things like molecules. However, a mole is a not an abbreviation for a molecule. For a better idea about how large of a number Avogadro's number is, you can watch this video: https://www.youtube.com/watch?v=TEl4jeETVmg. A mole of carbon-12 has a mass of 12.000 g, but a mole of natural carbon (which includes all the isotopes of carbon) has a mass of 12.011 g. The mole is defined such that one mole of an element is the same mass in grams as one atom is in amus. Let's say you want to know how much a mole of NaCl weighs. From the periodic table, you see that Na has an atomic mass of 22.990 atomic mass units, and Cl has 35.453 atomic mass units. One atom of NaCl has a mass of $22.990 + 35.453 = 58.443$ atomic mass units. This means a mole of NaCl has a mass of 58.443 grams. Handy, right? This is called the *molar mass*. It is the mass of one mole of a substance, and is given in units of g/mol (grams per mole). The molar mass of NaCl is 58.443 g/mol. The molar mass of carbon is 12.011 g/mol. Using dimensional analysis and the molar mass, you can determine the mass of a given number of moles of a substance.

Example: What is the mass of 2 moles of copper?

Solution: The conversion we will use is 1 mol Cu = 63.546 g Cu.

$$\frac{2 \text{ mol Cu}}{} \times \frac{63.546 \text{ g Cu}}{1 \text{ mol Cu}} = 127.092 \text{ g Cu}$$

Therefore, 2 moles of copper has a mass of 127.092 grams.

You can also find the molar mass of a molecule, like methane. Just like with elements, a mole of a molecule has the same mass in grams as a single molecule has in amus.

Example: What is the mass of 3.5 moles of methane?

Solution: Methane (CH_4) has a molecular mass of 16.043 amu, which means 1 mole of methane has a mass of 16.043 grams.

$$\frac{3.5 \text{ mol } CH_4}{} \times \frac{16.043 g CH_4}{1 \text{ mol } CH_4} = 56.151 \text{ g } CH_4$$

You can also use the molar mass to determine how many moles of a substance there are in a given mass of that substance.

Example: A standard AAA battery contains about 7.00 g of zinc. How many moles of zinc are in a AAA battery?

Solution: Zinc's molar mass is 65.38 g/mol.

$$\frac{7.00 \text{ g Zn}}{} \times \frac{1 \text{ mol Zn}}{65.38 \text{ g Zn}} \approx 0.107 \text{ g Zn}$$

In summary, a mole of a substance contains approximately 6.02×10^{23} particles (atoms or molecules) of that substance and has a mass equal to the molecular mass in grams.

The Mole Concept

For a substance, X, with a molar mass of x g/mol,

$$1 \text{ mol X } = 6.02 \times 10^{23} \text{ particles of X } = x \text{ g of X}$$

Exercise 2 Grams, Moles, Molecules, and Atoms

Working Space

Complete the table.

Substance	num. of particles	num. of moles	grams
$NaHCO_3$			35
HCl		1.2	
KH_2PO_4	12.5×10^{24}		

Answer on Page 15

Exercise 3 Burning Methane

Working Space

Natural gas is mostly methane (CH_4). When one molecule of methane burns, two oxygen molecules (O_2) are consumed. One molecule of H_2O and one molecule of CO_2 are produced.

If you need 200 grams of water, how many grams of methane do you need to burn?

(This is how the hero in "The Martian" made water for his garden.)

Answer on Page 16

If you fill a balloon with helium, it will have two different kinds of helium atoms. Most of the helium atoms will have 2 neutrons, but a few will have only 1 neutron. We say that these are two different *isotopes* of helium. We call them helium-4 (or ^4He) and helium-3 (or ^3He). Isotopes are named for the sum of protons and neutrons the atom has: helium-3 has 2 protons and 1 neutron.

A hydrogen atom nearly always has just 1 proton and no neutrons. A helium atom nearly always has 2 protons and 2 neutrons. So, if you have a 100 hydrogen atoms and 100 helium atoms, the helium will have about 4 times more mass than the hydrogen. We say "Hydrogen is about 1 atomic mass unit (amu), and helium-4 is about 4 atomic mass units."

What, precisely, is an atomic mass unit? It is defined as 1/12 of the mass of a carbon-12 atom. Scientists have measured the mass of helium-4, and it is about 4.0026 atomic mass

units. (By the way, an atomic mass unit is also called a *dalton*.)

Now you are ready to take a good look at the periodic table of elements. Here is the version from Wikipedia:

Periodic Table of Elements

IA	IIA	IIIB	IVB	VB	VIB	VIIB	VIIIB	VIIIB	VIIIB	IB	IIB	IIIA	IVA	VA	VIA	VIIA	VIIIA
1 **H** Hydrogen 1.01																	2 **He** Helium 4.00
3 **Li** Lithium 6.94	4 **Be** Beryllium 9.01											5 **B** Boron 10.81	6 **C** Carbon 12.01	7 **N** Nitrogen 14.01	8 **O** Oxygen 16.00	9 **F** Fluorine 19.00	10 **Ne** Neon 20.18
11 **Na** Sodium 22.99	12 **Mg** Magnesium 24.31											13 **Al** Aluminum 26.98	14 **Si** Silicon 28.09	15 **P** Phosphorus 30.97	16 **S** Sulfur 32.06	17 **Cl** Chlorine 35.45	18 **Ar** Argon 39.95
19 **K** Potassium 39.10	20 **Ca** Calcium 40.08	21 **Sc** Scandium 44.96	22 **Ti** Titanium 47.87	23 **V** Vanadium 50.94	24 **Cr** Chromium 52.00	25 **Mn** Manganese 54.94	26 **Fe** Iron 55.85	27 **Co** Cobalt 58.93	28 **Ni** Nickel 58.69	29 **Cu** Copper 63.55	30 **Zn** Zinc 65.38	31 **Ga** Gallium 69.72	32 **Ge** Germanium 72.63	33 **As** Arsenic 74.92	34 **Se** Selenium 78.97	35 **Br** Bromine 79.90	36 **Kr** Krypton 83.80
37 **Rb** Rubidium 85.47	38 **Sr** Strontium 87.62	39 **Y** Yttrium 88.91	40 **Zr** Zirconium 91.22	41 **Nb** Niobium 92.91	42 **Mo** Molybdenum 95.95	43 **Tc** Technetium (98)	44 **Ru** Ruthenium 101.07	45 **Rh** Rhodium 102.91	46 **Pd** Paladium 106.42	47 **Ag** Silver 107.87	48 **Cd** Cadmium 112.41	49 **In** Indium 114.82	50 **Sn** Tin 118.71	51 **Sb** Antimony 121.76	52 **Te** Tellurium 127.60	53 **I** Iodine 126.90	54 **Xe** Xenon 131.29
55 **Cs** Cesium 132.91	56 **Ba** Barium 137.33	57 - 71 **Lanthanides**	72 **Hf** Hafnium 178.49	73 **Ta** Tantalum 180.95	74 **W** Tungsten 183.84	75 **Re** Rhenium 186.21	76 **Os** Osmium 190.23	77 **Ir** Iridium 192.22	78 **Pt** Platinum 195.08	79 **Au** Gold 196.97	80 **Hg** Mercury 200.59	81 **Tl** Thallium 204.38	82 **Pb** Lead 207.20	83 **Bi** Bismuth 208.98	84 **Po** Polonium (209)	85 **At** Astatine (210)	86 **Rn** Radon (222)
87 **Fr** Francium (223)	88 **Ra** Radium (226)	89 - 103 **Actinides**	104 **Rf** Rutherfordium (265)	105 **Db** Dubnium (268)	106 **Sg** Seaborgium (271)	107 **Bh** Bohrium (270)	108 **Hs** Hassium (277)	109 **Mt** Meitnerium (276)	110 **Ds** Darmstadtium (281)	111 **Rg** Roentgenium (280)	112 **Cn** Copernicium (285)	113 **Nh** Nihonium (284)	114 **Fl** Flerovium 289	115 **Mc** Moscovium (288)	116 **Lv** Livermorium (293)	117 **Ts** Tennessine (294)	118 **Og** Oganesson (294)

57 **La** Lanthanum 138.91	58 **Ce** Cerium 140.12	59 **Pr** Praseodymium 140.91	60 **Nd** Neodymium 144.24	61 **Pm** Promethium (145)	62 **Sm** Samarium 150.36	63 **Eu** Europium 151.96	64 **Gd** Gadolium 157.25	65 **Tb** Terbium 158.93	66 **Dy** Dysprosium 162.50	67 **Ho** Holmium 164.93	68 **Er** Erbium 167.26	69 **Tm** Thulium 168.93	70 **Yb** Ytterbium 173.05	71 **Lu** Lutetium 174.97
89 **Ac** Actinium (227)	90 **Th** Thorium 232.04	91 **Pa** Protactinium 231.04	92 **U** Uranium 238.03	93 **Np** Neptunium (237)	94 **Pu** Plutonium (244)	95 **Am** Americium (243)	96 **Cm** Curium (247)	97 **Bk** Berkelium (247)	98 **Cf** Californium (251)	99 **Es** Einsteinium (252)	100 **Fm** Fermium (257)	101 **Md** Mendelevium (258)	102 **No** Nobelium (259)	103 **Lr** Lawrencium (262)

Figure 1.1: Periodic table from Wikipedia.

There is a square for each element. In the middle, you can see the atomic symbol and the name of the element. In the upper-right corner is the atomic number — the number of protons in the atom.

In the upper-left corner is the atomic mass in atomic mass units.

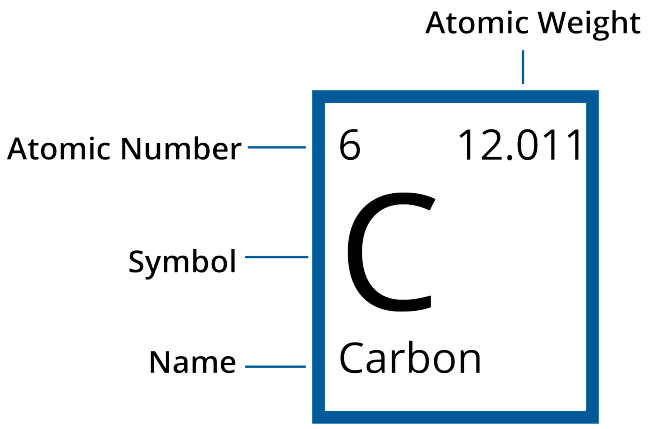

Look at the atomic mass of boron. About 80% of all boron atoms have six neutrons. The other 20% have only 5 neutrons. This difference is why most boron atoms have a mass of about 11 atomic mass units, but some have a mass of about 10 atomic mass units. The atomic mass of boron is equivalent to the average mass of a boron atom: 10.811.

Exercise 4 Mass of a Water Molecule

Working Space

Using the periodic table, what is the average mass of one water molecule in atomic mass units?

Answer on Page 16

1.4 xfer from intro chapter

fixme integrate into this chapter

1.4.1 Reading the Periodic Table

The Periodic Table organizes what we know about the structure of different elements. Each element has its own block or tile on the Periodic Table, and the information on the tile tells us about the structure of that atom. Take a look at the tile for carbon:

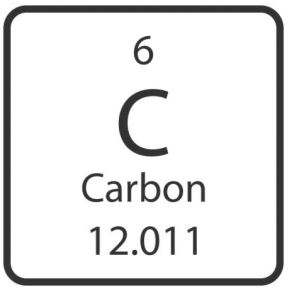

The letter (or letters, as is the case for other elements) is the atomic symbol for the element. There are two key numbers: the atomic number and the average atomic mass. For carbon, the atomic number is 6 and the average atomic mass is 12.011. The atomic number tells us how many protons there are in the nucleus of any atom of carbon. Since every element has a unique number of protons, every element has a unique atomic number. All carbon atoms have 6 protons. The other number is the average atomic mass - it tells us the weighted average of the mass of all the carbons in the universe. When the average atomic mass is in a whole number, as it is for polonium, it means that the element is very unstable. As a result, the mass given is the mass of the most stable isotope (we'll talk more about stability and isotopes below). On some periodic tables, the mass number of the most stable isotope will be in parentheses or brackets. In summary, if the larger number is a whole number, it is the mass number; if it is a decimal (even if the decimal ends in .00), it is the average atomic mass, which we will discuss further below.

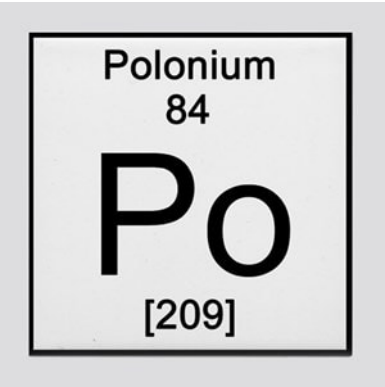

The Royal Society of Chemistry has a very useful interactive periodic table: periodictable.rsc.org. We can use the periodic tile for an element to determine the number of protons, electrons, and most common number of neutrons for a neutral atom of that element (we'll explain why the periodic tile tells us the "most common number of neutrons" below).

Example: State the atomic symbol for and the number of protons, neutrons, and electrons in a neutral atom of plutonium.

Solution: The plutonium tile on your periodic table should look something like this:

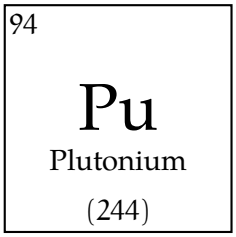

[The information may be arranged differently, but you should at least see the symbol and two numbers.] As you can see, the atomic symbol for plutonium is Pu. Since its atomic number is 94, we know every atom of plutonium has 94 protons. To know the number of electrons, we will take advantage of the fact that the question is asking about a *neutral* atom. This means there are the same number of positive charges as negative charges. So, since there are 94 protons, a neutral atom of plutonium must have 94 electrons (each proton has a +1 charge and each electron has a -1 charge). Lastly, let's determine the number of neutrons. The other number, 244, is the mass number. It represents the total number of protons and neutrons in the nucleus. Since we know plutonium has 94 protons, we can find the number of neutrons by subtracting the atomic number from the mass number:

$$244 - 94 = 150$$

mass number (protons + neutrons) — atomic number (protons) — number of neutrons

Therefore, an atom of plutonium has 150 neutrons. Now let's address how to find the number of neutrons when the periodic tile shows an average atomic mass, instead of a mass number. This occurs when there is more than one "version" of an element. In the case of plutonium, there is only one version, which is why the periodic tile shows a mass number instead of an average atomic mass. To learn about average atomic mass, we will use carbon as an example.

Have you heard of carbon-14 dating? The phrase "carbon-14" refers to a rare type of carbon that decays radioactively. By seeing how much carbon-14 has decayed, scientists can estimate the age of organic materials, such as bone or ash. Carbon-14 is a radioactive isotope (or version) of carbon. The 14 refers to the mass number - the total amount of protons and neutrons in the nucleus (sometimes, we shorten the isotope name by just using the atomic symbol, in this case C-14). Isotopes are versions of an element with different numbers of neutrons. The atomic number is the same for them all - they all have the same number of protons. But the different number of neutrons causes different isotopes to have different masses. Examine the models of carbon-12, carbon-13, and carbon-14 below. What is different between them? What is the same?

You should have noticed that all three atoms have 6 protons and 6 electrons, while they have differing numbers of neutrons. The most common isotope of carbon is carbon-12, with 6 protons and 6 neutrons in its nucleus. Carbon-14, on the other hand, has 8 neutrons, which makes the nucleus unstable, leading to radioactive decay. The average atomic mass is the weighted average of all the carbon atoms in existence. Since the vast majority of carbon is carbon-12, the average atomic mass is very close to 12. You cannot determine the mass number of an individual atom from the periodic table; it only tells you the average of all the isotopes. However, especially for light atoms (atoms in the first two rows of the periodic table), you can usually determine the mass number of the most common isotope by rounding the average atomic mass to the nearest whole number.

Example: Germanium has atomic symbol Ge. State the number of protons, number of electrons, and most common number of neutrons in a neutral atom of germanium.

Solution: Examining the periodic table, we see that germanium has an atomic number of 32, which means a neutral atom of germanium has 32 protons and 32 electrons. The average atomic mass is 72.630, which rounds up to 73. So, the most common isotope of germanium is Ge-73, which has $73 - 32 = 41$ neutrons.

Exercise 5 Determining Numbers of Subatomic Particles

Working Space

Use a periodic table to complete the table below (assume neutral atoms):

Element Name	Atomic Symbol	Protons	Most Common Number of Neutrons	Electrons
	Fr			
				33
Erbium				
		48		

Answer on Page 16

1.5 Heavy atoms aren't stable

When you look at the periodic table, there are a surprisingly large number of elements. You might be told to "Drink milk so that you can get the calcium you need." However, no one has told you "You should eat kale so that you get enough copernicium in your diet."

Copernicium, with 112 protons and 173 neutrons, has only been observed in a lab. It is highly radioactive and unstable (meaning it decays). A copernicium atom usually lives for less than a minute before decaying.

The largest stable element is lead, which has 82 protons and between 122 and 126 neutrons. Elements with lower atomic numbers than lead, have at least one stable isotope, while elements with higher atomic numbers than lead don't.

Bismuth, with an atomic number of 83, is *almost* stable. In fact, most bismuth atoms will live for billions of years before decaying!

This is a draft chapter from the Kontinua Project. Please see our website (https://kontinua.org/) for more details.

Appendix A

Answers to Exercises

Answer to Exercise 1 (on page 3)

1. 12.011 amu + 4(1.008 amu) = 16.043 amu
2. 63.546 amu + 32.06 amu + 4(15.999 amu) = 159.602 amu
3. 6(12.011 amu) + 12(1.008 amu) + 6(15.999) amu = 180.156 amu

Answer to Exercise 2 (on page 5)

Substance	num. of particles	num. of moles	grams
$NaHCO_3$	2.509×10^{23}	0.4166	35.00
HCl	7.53×10^{23}	1.25	45.58
KH_2PO_4	12.5×10^{24}	20.8	2820

$$\frac{35.00 \text{ g } NaHCO_3}{} \times \frac{1 \text{ mol } NaHCO_3}{84.007 \text{ g } NaHCO_3} = 0.4166 \text{ mol } NaHCO_3$$

$$\frac{0.4166 \text{ mol } NaHCO_3}{} \times \frac{6.02214076 \times 10^{23} \text{ molec } NaHCO_3}{1 \text{ mol } NaHCO_3} = 2.509 \times 10^{23} \text{ molec } NaHCO_3$$

$$\frac{1.25 \text{ mol } HCl}{} \times \frac{36.46 \text{ g } HCl}{1 \text{ mol } HCl} = 45.58 \text{ g } HCl$$

$$\frac{1.25 \text{ mol } HCl}{} \times \frac{6.02214076 \times 10^{23} \text{ molec } HCl}{1 \text{ mol } HCl} = 7.53 \times 10^{23} \text{ molec } HCl$$

$$\frac{12.5 \times 10^{24} \text{ molec } KH_2PO_4}{} \times \frac{1 \text{ mol } KH_2PO_4}{6.02214076 \times 10^{23} \text{ molec } KH_2PO_4} = 20.8 \text{ mol } KH_2PO_4$$

$$\frac{20.8 \text{ mol } KH_2PO_4}{} \times \frac{136.086 \text{ g } KH_2PO_4}{1 \text{ mol } KH_2PO_4} = 2820 \text{ g } KH_2PO_4$$

Answer to Exercise 3 (on page 6)

From the last exercise, you know that 1 mole of water weighs 18.01528 grams, meaning 200 grams of water is about 11.1 moles. So you need to burn 11.1 moles of methane.

What does one mole of methane weigh? Using the periodic table: $12.0107 + 4 \times 1.00794 = 16.04246$ grams.

$16.0424 \times 11.10 = 178.1$ grams of methane.

Answer to Exercise 4 (on page 10)

The average hydrogen atom has a mass of 1.00794 atomic mass units.

The average oxygen atom has a mass of 15.9994.

$2 \times 1.00794 + 15.9994 = 18.01528$ atomic mass units.

Answer to Exercise 5 (on page 14)

Element Name	Atomic Symbol	Protons	Most Common Number of Neutrons	Electrons
Francium	Fr	87	136	87
Arsenic	As	33	42	33
Erbium	Er	68	99	68
Cadmium	Cd	48	64	48

Index

atomic mass, 10
atomic mass unit, 6
Avogadro's number, 3

isotopes, 6

mole, 4

neutron, 2

periodic table of elements, 8
proton, 2