Chapter 1

Introduction to Electricity

What happens when you turn on a flashlight? The battery in the flashlight acts as an electron pump, and the electrons flow through the wires to the lightbulb (or LED). As the electrons pass through the lightbulb, they excite the molecules within, which gives off light and heat. (LEDs also give off light and heat, but they give off much less heat.) The electrons then return to the battery to be pumped around again.

When electricity is flowing through a copper wire, the protons and neutrons of the copper stay put, while the electrons jump between the atoms on their way from the battery to the lightbulb and back again.

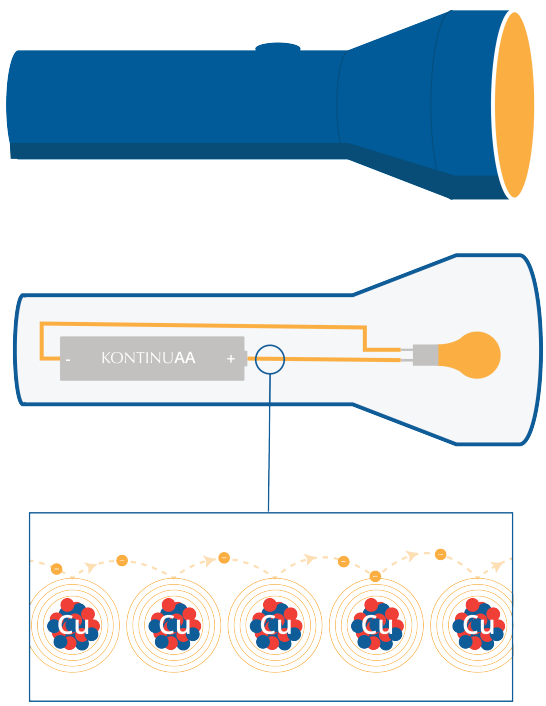

In some materials, like copper and iron, electrons are loosely bound to their nuclei, forming a sea of electrons, which allows energy to flow. These are good *electrical conductors*. In the presence of an electric field, which we will talk about in a future chapter, the electrons are free to move about, allowing *charge* to flow free. In other materials, like glass and

plastic, electrons don't leave their nuclei as easily. This makes them are terrible electrical conductors – we call these materials *electrical insulators*. For example, the plastic around a wire is used for electrical insulation.

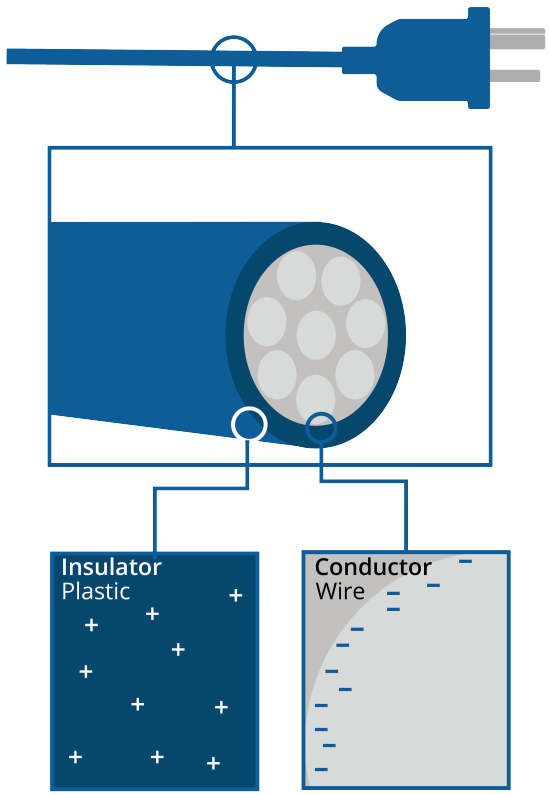

Figure 1.1: A cross section of an outlet plug.

1.1 Units

Electrons are very small, so to study them, scientists came up with a unit that represents *a lot* of electrons. 1 *coulomb* is about 6,241,509,074,460,762,608 electrons. When 5 coulombs enter one end of the wire every second (and simultaneously 5 coulombs exit the other end), we say "This wire is carrying 5 amperes of current."

(Truthfully, we usually shorten ampere to just "amp". This is sometimes a little awkward, because we also often shorten the word "amplifier" to "amp", but you should generally be able to tell which is which from the context.)

If you look at the circuit breakers or fuses for your home's electrical system, you'll see that each one is rated in amps. For example, maybe the circuit that supplies power to your kitchen has a 10 amp circuit breaker. If, for some reason, more than 10 amps tries to pass

through that wire, the circuit breaker will turn off the whole circuit.

When your flashlight is on, it pushes about 1 amp of current through the lightbulb (When it is off, there is no current in the lightbulb).

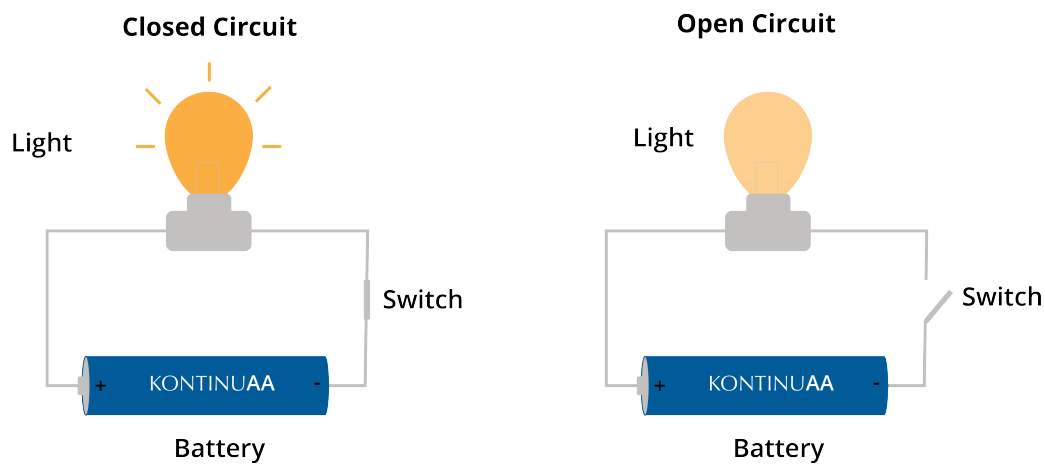

The lightbulb creates *resistance* that the current pushes through. Think of it like plumbing: The current is the amount of water passing through a pipe. The resistance is something that tries to stop the current – like a ball of hair, similar how different surfaces apply friction when pushing a box. The battery is what allows the current to push through the resistance; we call that pressure *voltage*. Especially in physics, voltage is often referred to as *electromagnetic potential*.

Superconductor is an extreme example of a conductor. Here, there is *absolutely no resistance* to the passing of charge. Materials that are conductors can become superconductors by decreasing their temperature to extremely low temperatures, even to absolute zero.

1.2 Capacitors

Two conductors separated by a distance that carry equal but opposite charges ($+Q$ and $-Q$) are a system that we refer to as **capacitors**. Most real-life capacitors (like the cylindrical electrolytic ones) are actually long strips of foil rolled up. We treat them as parallel plates, or metal plates with d between them.

Capacitors are similar to batteries, in the way that they store energy, however, capacitors store energy in the form of an electric field. As a result, capacitors store much less energy but can release it at a signficantly higher rate. The measure of how much a capacitor holds

is called **capacitance**, represented with the symbol C and measured in Farads (F), where $1\ F = \frac{1\ \text{Coulomb}}{1\ \text{Volt}}$.[1]

Capacitance (C) is defined as the ratio of the magnitude of the charge (Q) on either conductor to the potential difference (V) between them:

$$C = \frac{Q}{V}$$

We will explore the underlying nature of charge in greater detail in the Charge chapter. For a parallel-plate capacitor with a vacuum between the plates $(\kappa = 1)$, the capacitance is determined by its geometry:

$$C = \epsilon_0 \frac{A}{d}$$

Think of an medical defibrillator, a machine that delivers a specific amount of volts within an instantaneous moment of time. The goal of a defibrillator is not just to provide *charge*, but to provide Energy (U_C) to *reset* the heart's electrical rhythm. The energy stored is given by:

$$U_C = \frac{1}{2}CV^2$$

which comes from the area under a **Voltage** (V) vs **Charge** Q, and the fact that potential charge is $Q = CV$

Defibrillators often charge to several thousand volts. Because V is squared in the energy equation, increasing the voltage is the most efficient way to increase the *shock* power. To keep the device portable while maintaining high U_C or Electric Potential Energy, manufacturers use advanced dielectrics (κ) to maximize C without making the internal plates massive. When the paddles touch the chest and the button is pressed, the capacitor discharges through the patient's body. The patient's chest acts as a resistor in an RC circuit. The current I follows

$$I(t) = \frac{V_0}{R} e^{-t/RC}$$

this is a great example of current following an example of exponential decay!

1.3 Circuit Diagrams

Here is a circuit diagram of your flashlight:

[1] 1 Farad is actually an enormous amount, enough to store power for the stereo system of an SUV! Smartphone circuits are 0.1010 μF, measured in microfarads, which are 10^{-6} F

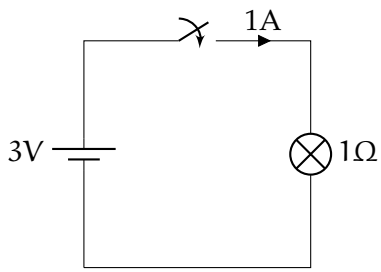

The lines are wires. The symbols that we will use are:

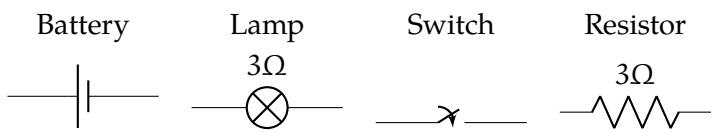

The battery pushes the electrons from the positive end (the larger line) to the negative end (the smaller line), so the circuit must go around in a circle for the current to flow. This is why the current stops flowing when the switch breaks the circuit.

You can think of a switch as having zero resistance when it is closed and infinite resistance when it is open.

For our purposes, a lamp is just a resistor that gives off light.

1.4 Ohm's Law and Resistance

Current is a measure of how much *charge* per *time* is flowing through an area:

$$I = \frac{\Delta q}{\Delta t} \tag{1.1}$$

This is a measure of $1\frac{\text{coulomb}}{\text{second}}$, which we give the SI unit amperes or amps, represented with A.

Resistance is measured in *ohms*, and we use a Greek capital omega for that: Ω

Ohm's Law

Whenever a voltage V is pushing a current I through a resistance of R in given by someΩ, the following is true:

$$V = IR$$

where V is in volts, I is in amps, and R is in ohms.

Due to this relationship, we can find current given voltage and resistance using $I = \frac{V}{R}$. *Ohmic* materials maintain a constant resistance no matter how many volts are being put into it.

The resistance of a conductor dependes on it's length, cross-sectional area, and resistivity. Due to Ohm's equation, we define resistance, measured in ohm's, as $1\frac{\text{volt}}{\text{ampere}}$

1.5 Power and Watts

Joule's Law

When a current I is passing through a resistance R, the power consumed is

$$W = I^2R$$

where W is in watts, I is in amps, and R is in ohms.

Of course $V = IR$, so we can extend this to:

$$W = I^2R = IV = \frac{V^2}{R}$$

Your flashlight's batteries provide about 3 volts. How much battery power is the flashlight using when it is on? The power (in watts) produced by the battery is the product of the voltage (in volts) and the current (in amps). This means your flashlight is giving off $3volts \times 1amp = 3watts$ of power. Some of that power is given off as light, some as heat.

A watt is 1 joule of energy per second. We say that a watt is a measure of *power*.

When we talk about how much energy is stored in a battery, we use a unit like a kilowatt-hour. A kilowatt-hour is equivalent to 3.6 million joules.

Portable Chargers

A portable charger labeled 165 W means that it's *maximum power output* is 165 watts. This is the maximum amount of voltage it can deliver to your device at any given moment.

Often, there is a noted voltage and current label on the back of the device.Power is the product of Voltage (V) and Current (I), expressed by the formula:

$$P = V \times I$$

In the case of a 165 W charger, it might output something like 20 V at 8.25 A ($20 \times 8.25 = 165$).

However, the 165 Watt charger will not always deliver 165 Watts to your phone. That is enough to power a gaming PC! Instead, protocols within modern chargers limit how much a device actually gets charged. Most smartphones only need 20 W. Chargers that are labled fairly high in wattage often have multiple ports (this one has 4), and splits the charging load among all of them.

Now, if you see a measurement in mAh (milliampere-hours) or Wh (Watt-hours), that is the maximum *capacity* of the portable charger. This 165 W has a 25,000 mAh rating, meaning it stores approximately 92.5 Wh, or watt-hours. This comes from $\text{Wh} = \frac{\text{mAh} \times \text{V}}{1000}$, where most power banks deliver a nominal 3.7 V.[2]

1.6 Another great use of RMS

In many electrical problems, the voltage fluctuates a great deal. For example, the fluctuations in voltage makes the sound that comes out of an audio speaker.

You can use the root-mean-squared of the voltage to figure out the average power your speaker is consuming.

Let's say that the RMS of the voltage you are sending to the speaker is V_{rms} and the resistance of the speaker is R ohms. This means the power consumed by the speaker is:

$$P = \frac{V_{rms}^2}{R}$$

Similarly, if you know the RMS of the current you are pushing through the speaker is I_{rms}, then the power consumed by the speaker is:

$$P = I_{rms} R$$

[2] Airlines often do not let you take anything over 100 Wh.

1.7 Electricity Dangers

Large amounts of electricity moving through your body can hurt or even kill you. You must be careful around electricity.

That said, your body is not a very good conductor, so low-voltage systems (like a flashlight) don't have enough voltage to move significant amounts of current through your body.

However, the electricity in a power outlet has much more voltage. The voltage in these outlets is fluctuating between positive and negative, so we call it *Alternating Current* or AC.

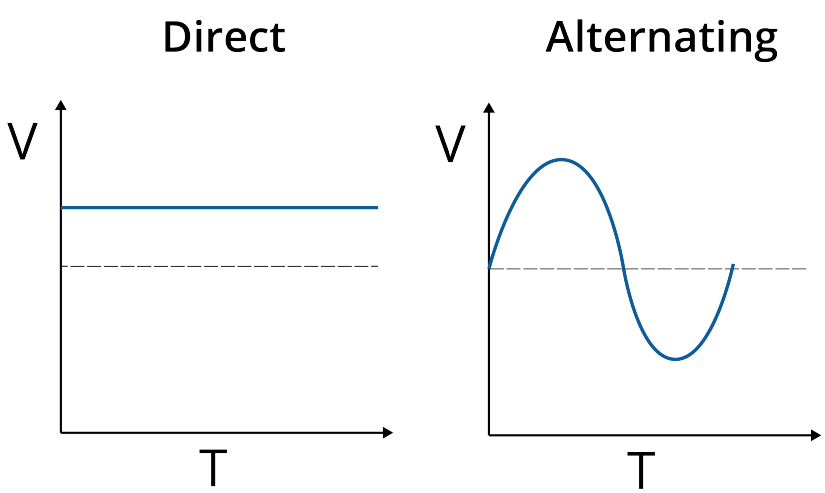

In most countries, the RMS of the voltage between 110 and 240 V. (The peak voltage is always $\sqrt{2}$ times the RMS value. In the US, for example, people say "Our outlets supply 120 V." They mean that the RMS of the voltage difference between the wire and the earth is 120V. The peak voltage is almost 170V.)

How much current can a human handle? Not much. You can barely feel 1 mA moving through your body, but at 16 mA, your muscles will clench and you won't be able to relax them — many people die from electrocution because they grab a wire which pushes enough current through their body to prevent them from letting go of the wire. At 20 mA, a human's respiratory muscles become paralyzed.

The fuse breaker in a house will often allow 20 A to flow through the circuit before it shuts off the power. Always be very sure to shut off the power before touching any of the

wiring in your house.

While water is actually a mediocre conductor, it can still deliver enough current to kill you. If you see a wire in a puddle, you should not touch the puddle. Interestingly, because of the salt, sea water is more than 100 times better at conducting electricity than the water you drink.

If you hold a wire in each hand, how many Ohms of resistance will your body have? Once it gets past your skin, you will look like a bag of salt water to the electricity. After the skin, your body will have a resistance of about 300Ω. However, the skin is a pretty good insulator. If you have dry, calloused hands, your skin may add 100,000Ω to the resistance.

This is a draft chapter from the Kontinua Project. Please see our website (https://kontinua.org/) for more details.

Appendix A

Answers to Exercises

Index

amp or ampere, 2

capacitors, 3
coulombs, 2

defibrillator, 4

Joule's law, 6

Ohm's law, 5
ohms, 5

resistance, 3

voltage, 3
volts, 5

watts, 6