Chapter 1

Atmospheric Pressure

The air you breathe is a blend of gases:

1. 78% nitrogen in the form of N_2
2. 21% oxygen in the form O_2
3. 1% other gases (mostly argon)

If you fill a balloon with helium (He), the helium will push against the interior of the balloon with a certain amount of pressure. The pressure is the same at every point in the interior of the balloon. Pressure, then, is force spread over some area. Force is commonly measured in newtons. Pressure is measured in *pascals*. A pascal is 1 newton per square meter.

We don't usually think about it, but the air outside the balloon is also pushing against the exterior of the balloon. We call this *barometric pressure* or *atmospheric pressure*, and it is caused by gravity pulling on the gas molecules above the balloon.

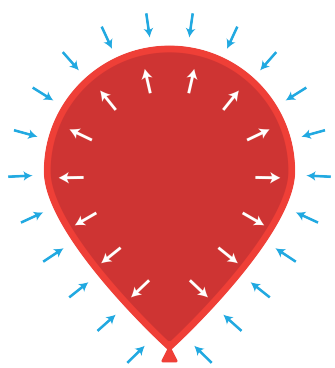

Figure 1.1: Air pushes both ways on a balloon.

Imagine a square meter on the ground at sea level. Now imagine the column of air above it — reaching all the way to the top of the atmosphere.

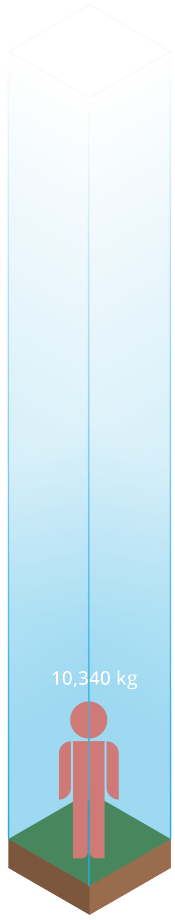

Figure 1.2: An air column surronding a person experiences a large amount of pressure.

The air inside that column has a mass of about 10,340 kg. One kilogram on the earth experiences a gravitational force of 9.8 N. So the atmospheric pressure all around you is about 101,332 pascals. When dealing with such large numbers, we often use kilopascals. We'd say the barometric pressure at sea level is about 101.3 kPa.

That's a lot of pressure! Why doesn't your ribcage collapse crushing your lungs? The air *inside* your lungs is the same pressure as the air push on the outside of your rib cage.

This is why we go about our lives relatively oblivious to this huge force that is all around us — but you can see it sometimes. For example, if you suck the air out of a plastic bottle, the bottle will be crushed by the barometric pressure.

1.1 Altitude and Atmospheric Pressure

If you let go of the balloon, as it rises through this column there will be less and less air mass above it, and thus less and less atmospheric pressure on the outside of the balloon.

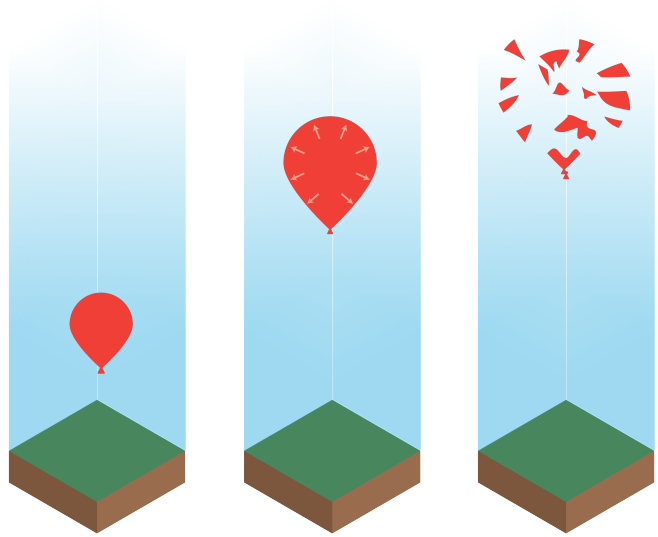

Figure 1.3: As a balloon rises, it reaches a point of less and less outer pressure.

What would be the atmospheric pressure at h meters above sea level? Here is a handy formula for that:

$$p = 101,332 \times \left(1 - \left(2.25577 \times 10^{-5} \times h\right)\right)^{5.25588}$$

where p is the atmospheric pressure in pascals.

Exercise 1 Atmospheric Pressure

Working Space

You are thinking about riding your bicycle to the top of Mount Everest. You are worried when the atmospheric pressure outside the tire drops, the tire will fail. (I have had a tire fail before; It is very, very loud.)

Calculate the atmospheric pressure at the top of Mount Everest (9,144 meters above sea level).

Answer on Page 13

1.2 How a Drinking Straw Works

When you suck on a drinking straw, why does the beverage rise? It is actually pushed by atmospheric pressure.

Before you put your mouth on the straw, the atmospheric pressure is pressing on the entire surface of the liquid (even inside the straw) evenly. Gravity pulls on the liquid making the surface level.

When you suck some air out of the straw, the pressure on the surface inside the straw drops. The atmospheric pressure on the surface outside the straw pushes into the straw and the beverage rises.

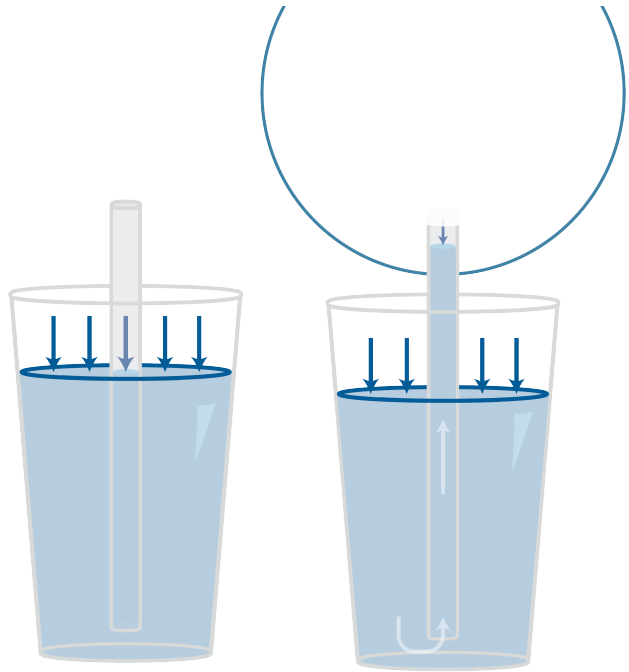

Figure 1.4: You use pressure to counteract gravity in a straw.

Of course, gravity is still trying to pull the liquid inside the straw back down. And for every inch that you lift the liquid in the straw, the force of gravity gets greater, demanding more suction.

1.2.1 The Longest Usable Straw

Assuming you are drinking water in a place with 100 kPa of atmospheric pressure, how high could you suck water with a perfect vacuum? That is, given a very, very long and very, very stiff drinking straw, if you created a pressure of 0 Pa inside, how far above the surface of the glass could you get the water?

Let's say a cross-section of the straw has an area of a square meters, and the very top of the column of water is h meters above the surface in the glass.

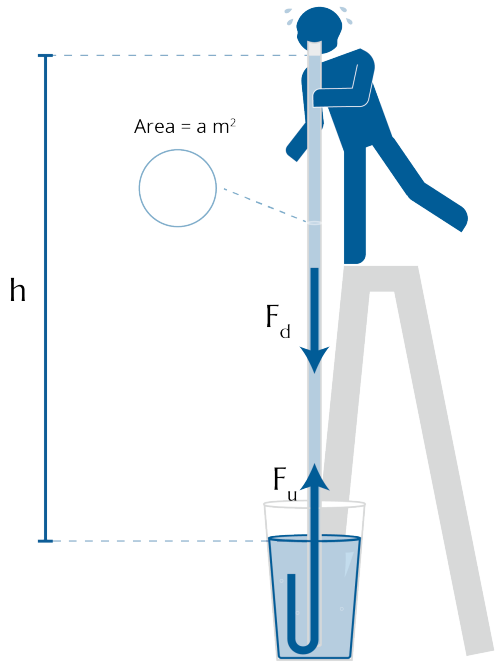

With how many newtons of force is the atmosphere pushing the water upward? 100 kPa = 100,000 newtons per square meter. So:

$$F_u = (100,000)a$$

With how many newtons of force is gravity pulling the water in the straw downward? The volume of the water is ah. A cubic meter of liquid water weights 1000 kg. The force of gravity is 9.8 Newtons per kg.

$$F_d = (ah)(1000)(9.8)$$

The water will stop rising when $F_u = F_d$. So, to find h, we substitute in:

$$(100,000)a = (ah)(1000)(9.8)$$

Notice that we can divide both sides by a getting:

$$h = \frac{100,000}{9,800} = 10.2 \text{ meters}$$

A perfect vacuum would only be able to drag the water up 10.2 meters.

1.2.2 Millimeters Mercury

The density of mercury is 13,500 kg per cubic meter. How far up a straw would a perfect vacuum pull mercury?

$$h = \frac{100,000}{(9.8)(13,500)} \approx 0.756 \text{ meters}$$

When the atmospheric pressure is 100kPa, the mercury will rise 756 mm into a vacuum.

This is actually how scientists measure atmospheric pressure. They have a long glass tube filled with mercury. One end is closed off and pointed into the sky (exactly opposite the direction of gravity). The other end is placed into a dish of mercury. There are millimeter marks on the glass tube.

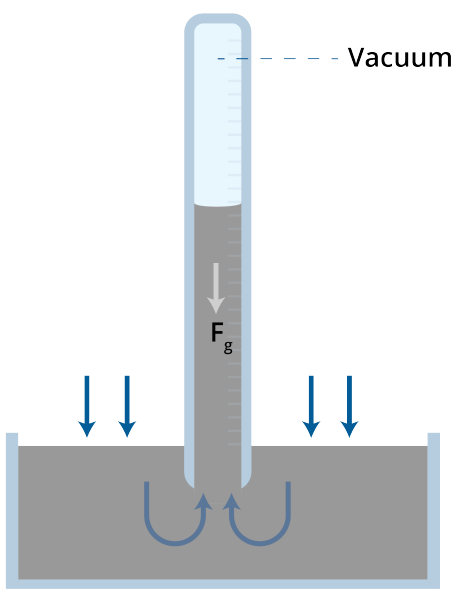

We use fluctuations in the atmospheric pressure to help us predict the weather. You might hear a weather nerd with a barometer in their house say, "Wow, the barometer has gone from 752 to 761 millimeters mercury in the last hour. A high-pressure system is moving in."

1.3 How Siphon Works

Let's say you had two cups on a table; one is filled with water, one is empty. And you connected them with an empty U -shaped straw. Water will not crawl up the empty straw — the pressure on each end of the straw is the same, and crawling the straw (against gravity) would require energy.

However, what if the straw were filled with water? Then the force of gravity is pulling the water on each side of the hump in different directions. However, the side going into the empty glass pulls a little harder. That is sufficient to create enough suction to pull the water in the other side up and over the hump.

In turn, this will pull more water. Water will continue to flow from the full glass to the empty one until their surfaces are at the same level. At this point, the pull of gravity is the same on each side of the tube.

This is known as a *siphon*. Notice that atmospheric pressure makes the siphon possible. When the water on one side is pulled down by gravity, the atmospheric pressure pushes the other side up. If you were on a planet with plenty of gravity, but no atmosphere, a siphon wouldn't work.

A siphon is especially useful when you want to get liquid out of a container that is too big to pour. For example, if you wanted to take the gasoline out of a car, you could use any flexible tubing to make a siphon. You would put the hose in the gas tank, suck enough gas up into the hose to get the siphon going, then put the hose into your jug. (If you ever do this, be extra careful not to suck any of the gasoline into your mouth; ingesting even a little bit of gasoline can make you incredibly sick, or even kill you.)

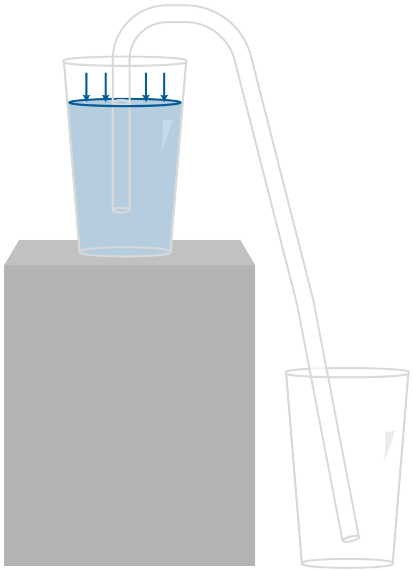

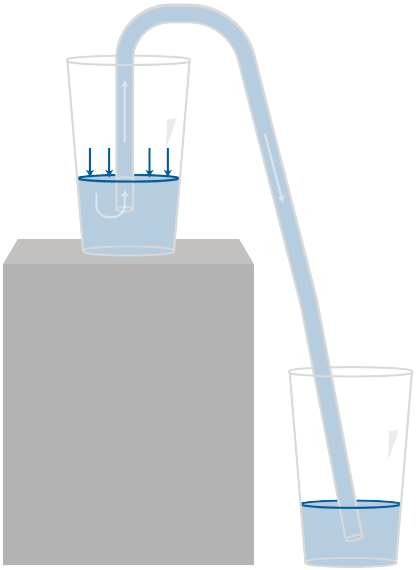

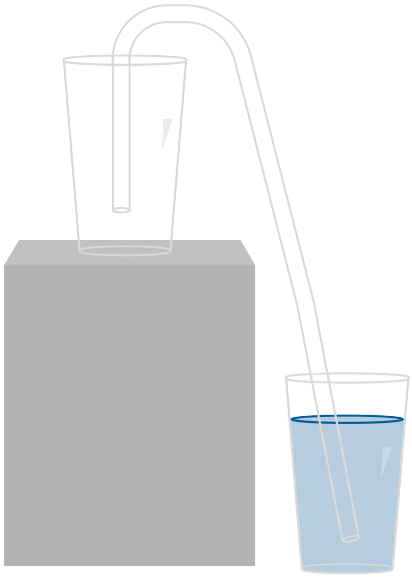

There are two rules to siphons:

- The peak of the siphon needs to be low enough for atmospheric pressure to push the liquid that high. For water at sea-level, for example, the peak of the siphon can't be more than 10.2 meters above the surface of the source liquid.
- The tube has to carry the liquid to a lower level than the surface of the source liquid. If the destination end of the siphon is submerged, the surface of the liquid it is submerged in must be lower than the surface of the source liquid. If the destination end of the siphon is not submerged, its opening must be lower than the surface of the source liquid.

As long as you follow these two rules, your siphons can be very creative. For example, every toilet has a siphon in it.

1.4 How a Toilet Works

Before we talk about toilets, you should know about P-traps. The drain from every sink, shower, and toilet in your house curves up and then down. This is known as a *P-trap*. The P-trap should always have some water in it. That keeps stinky (and flammable!) gases in the sewer from coming up and into your house.

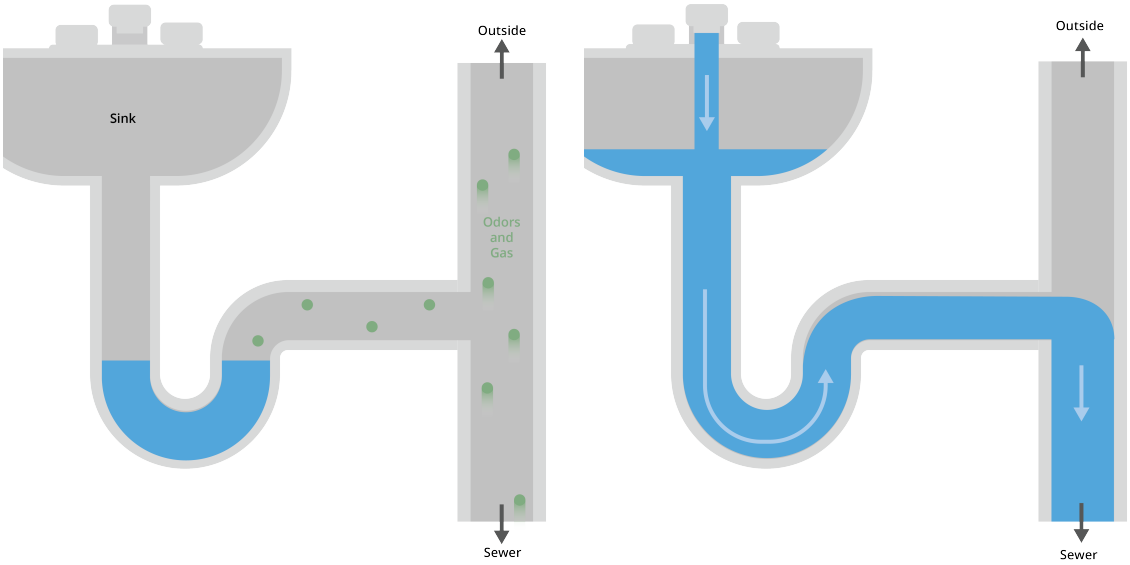

If one of your fixtures (especially one that hasn't been used in a while) smells like raw sewage, run some water to ensure that the P-trap is full.

Now, back to the toilet! The drain in the bottom of the toilet is connected to a siphon into the sewer. The siphon is filled with air most of the time. However, when you flush the toilet, water rushes from the tank into the bowl, which also fills the siphon. Once the siphon is filled, it pulls water out of the toilet until air starts to enter the siphon. At that point, the water stops flowing.

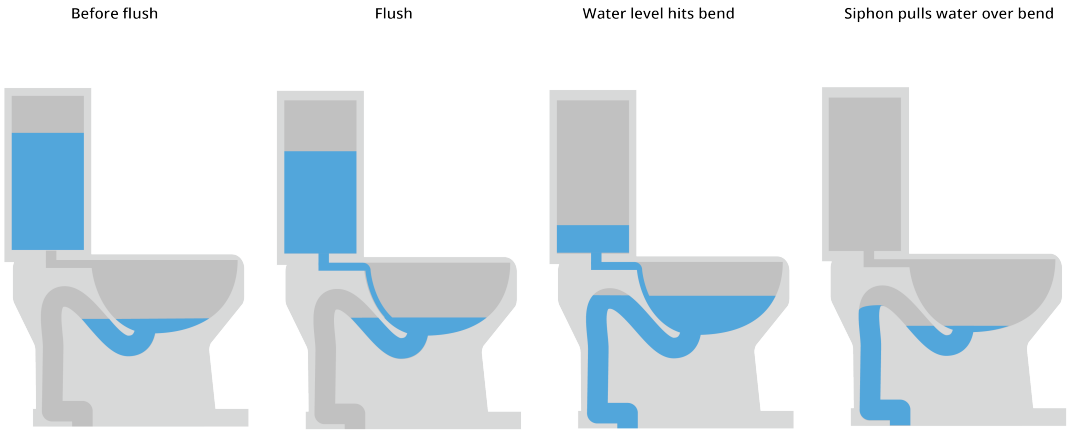

Figure 1.5: The steps a toilet takes when siphoning out waste.

The toilet tank is pretty simple: it has a float and valve that opens with the float is too low. So, anytime the water-level is too low, the value is open and slowly filling the tank. This means the tank is nearly always filled with a precise amount of water.

When you flush, a small door in the bottom of the tank is opened and the water rushes into the bowl. When the water is out, the door closes again so the tank can refill.

This is a draft chapter from the Kontinua Project. Please see our website (https://kontinua.org/) for more details.

Appendix A

Answers to Exercises

Answer to Exercise 1 (on page 4)

$$p = 101,332 \times \left(1 - 2.25577 \times 10^{-5} \times h\right)^{5.25588}$$

and $h = 9,144$. Thus,

$$p \approx 30.1\text{kPa}$$

Index

atmospheric pressure, 1

barometric pressure, 1

millimeters mercury, 7

pressure, 1

straw
    drinking, 4