Chapter 1

Quadcopters

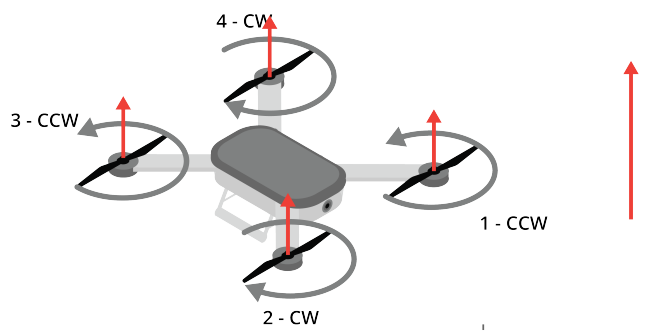

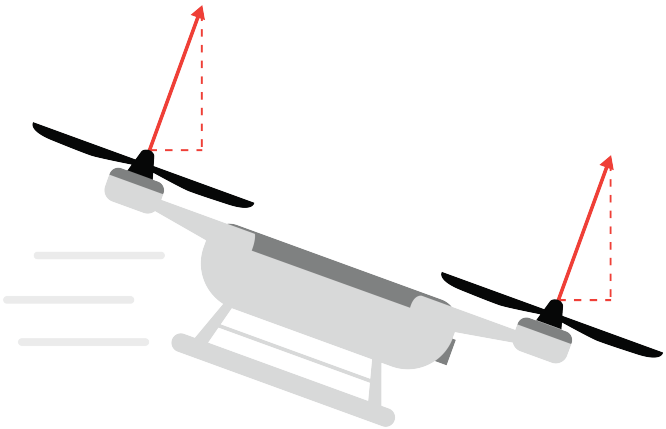

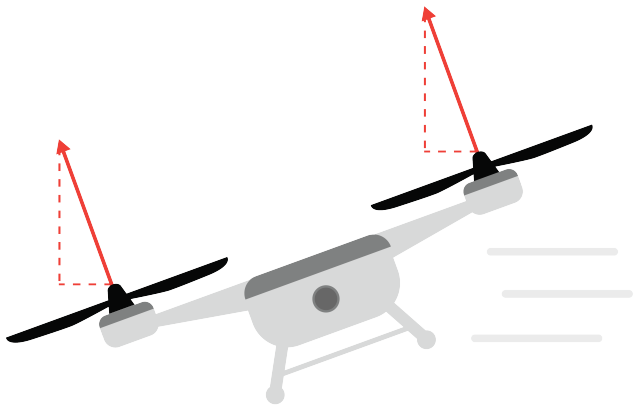

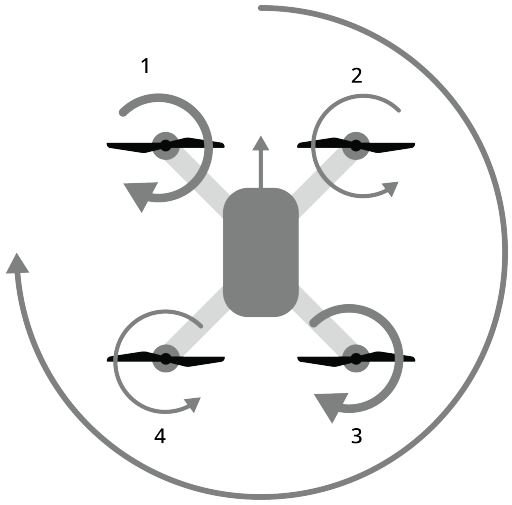
1
2
4
3

Appendix A

Answers to Exercises