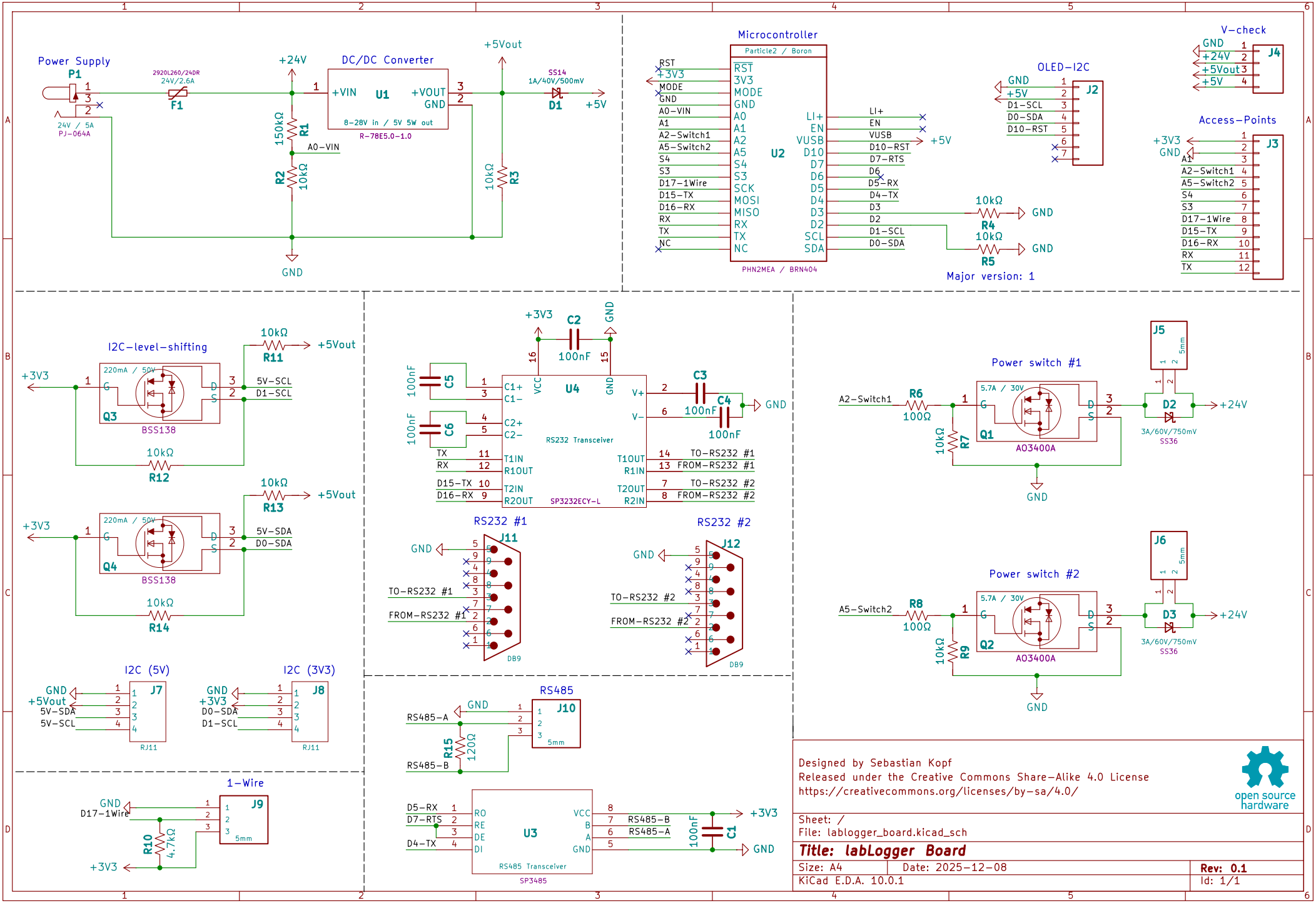
Power Supply
P1
24V / 5A
PJ-064A
2920L260/24DR
24V/2.6A
F1
+24V
DC/DC Converter
+VIN
U1
+VOUT
GND
8-28V in / 5V 5W out
R-78E5.0-1.0
+5Vout
SS14
1A/40V/500mV
D1
+5V
150kΩ
R1
A0-VIN
R2
10kΩ
10kΩ
R3
GND
Microcontroller
Particle2 / Boron
U2
PHN2MEA / BRN404
RST
+3V3
MODE
GND
A0-VIN
A1
A2-Switch1
A5-Switch2
S4
S3
D17-1Wire
D15-TX
D16-RX
RX
TX
NC
LI+
EN
VUSB
D10
D7
D6
D5
D4
D3
D2
SCL
SDA
D10-RST
D7-RTS
D5-RX
D4-TX
D1-SCL
D0-SDA
10kΩ
R4
10kΩ
R5
Major version: 1
OLED-I2C
J2
V-check
J4
+24V
+5Vout
+5V
Access-Points
J3
I2C-level-shifting
220mA / 50V
Q3
BSS138
R11
R12
5V-SCL
D1-SCL
Q4
R13
R14
5V-SDA
D0-SDA
I2C (5V)
J7
RJ11
I2C (3V3)
J8
1-Wire
J9
5mm
R10
4.7kΩ
C2
100nF
C5
C6
U4
RS232 Transceiver
SP3232ECY-L
C3
C4
TO-RS232 #1
FROM-RS232 #1
TO-RS232 #2
FROM-RS232 #2
RS232 #1
J11
DB9
RS232 #2
J12
RS485
J10
RS485-A
RS485-B
R15
120Ω
U3
RS485 Transceiver
SP3485
C1
Power switch #1
A2-Switch1
R6
100Ω
R7
Q1
AO3400A
J5
D2
3A/60V/750mV
SS36
Power switch #2
A5-Switch2
R8
R9
Q2
J6
D3
Designed by Sebastian Kopf
Released under the Creative Commons Share-Alike 4.0 License
https://creativecommons.org/licenses/by-sa/4.0/
open source hardware
Sheet: /
File: lablogger_board.kicad_sch
Title: labLogger Board
Size: A4
Date: 2025-12-08
Rev: 0.1
KiCad E.D.A. 10.0.1
Id: 1/1