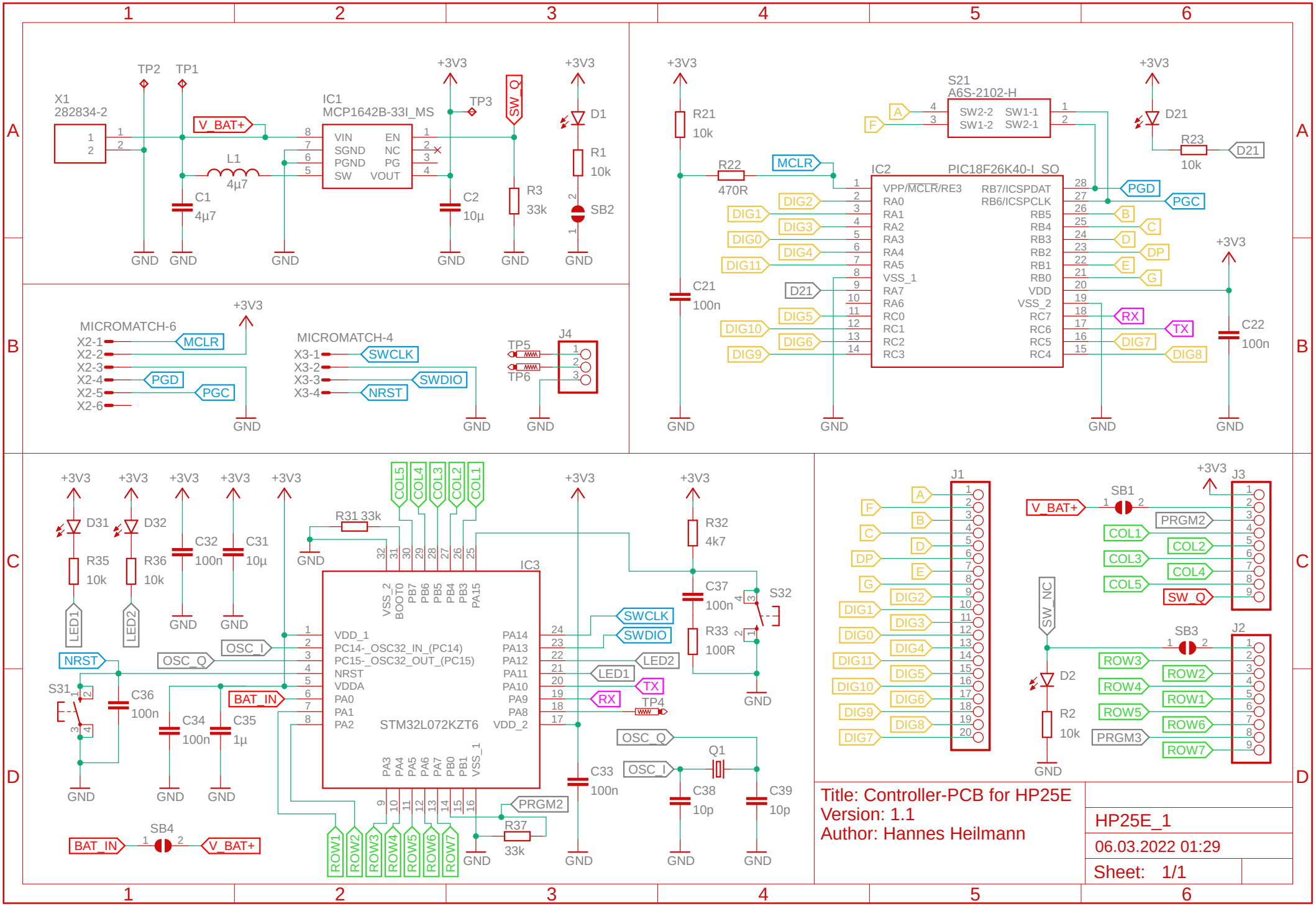
X1
282834-2
TP2
TP1
V_BAT+
L1
4µ7
C1
4µ7
IC1
MCP1642B-33I_MS
VIN
SGND
PGND
SW
EN
NC
PG
VOUT
+3V3
TP3
SW_Q
C2
10µ
R3
33k
D1
R1
10k
SB2
GND
MICROMATCH-6
X2-1
X2-2
X2-3
X2-4
X2-5
X2-6
MCLR
PGD
PGC
MICROMATCH-4
X3-1
X3-2
X3-3
X3-4
SWCLK
SWDIO
NRST
TP5
TP6
J4
R21
10k
R22
470R
C21
100n
S21
A6S-2102-H
SW2-2
SW1-2
SW1-1
SW2-1
D21
R23
10k
IC2
PIC18F26K40-I_SO
VPP/MCLR/RE3
RA0
RA1
RA2
RA3
RA4
RA5
VSS_1
RA7
RA6
RC0
RC1
RC2
RC3
RB7/ICSPDAT
RB6/ICSPCLK
RB5
RB4
RB3
RB2
RB1
RB0
VDD
VSS_2
RC7
RC6
RC5
RC4
DIG1
DIG2
DIG3
DIG4
DIG5
DIG6
DIG7
DIG8
DIG9
DIG10
DIG11
DIG0
RX
TX
C22
100n
D31
D32
R35
10k
R36
10k
LED1
LED2
C32
100n
C31
10µ
R31 33k
COL5
COL4
COL3
COL2
COL1
IC3
STM32L072KZT6
VDD_1
PC14-_OSC32_IN_(PC14)
PC15-_OSC32_OUT_(PC15)
NRST
VDDA
PA0
PA1
PA2
PA14
PA13
PA12
PA11
PA10
PA9
PA8
VDD_2
VSS_2
BOOT0
PB7
PB6
PB5
PB4
PB3
PA15
PA3
PA4
PA5
PA6
PA7
PB0
PB1
VSS_1
OSC_I
OSC_Q
BAT_IN
S31
C36
100n
C34
100n
C35
1µ
SB4
R32
4k7
C37
100n
S32
R33
100R
TP4
C33
100n
Q1
C38
10p
C39
10p
PRGM2
R37
33k
ROW1
ROW2
ROW3
ROW4
ROW5
ROW6
ROW7
J1
J3
SB1
PRGM2
SW_NC
SB3
J2
D2
R2
10k
PRGM3
Title: Controller-PCB for HP25E
Version: 1.1
Author: Hannes Heilmann
HP25E_1
06.03.2022 01:29
Sheet: 1/1