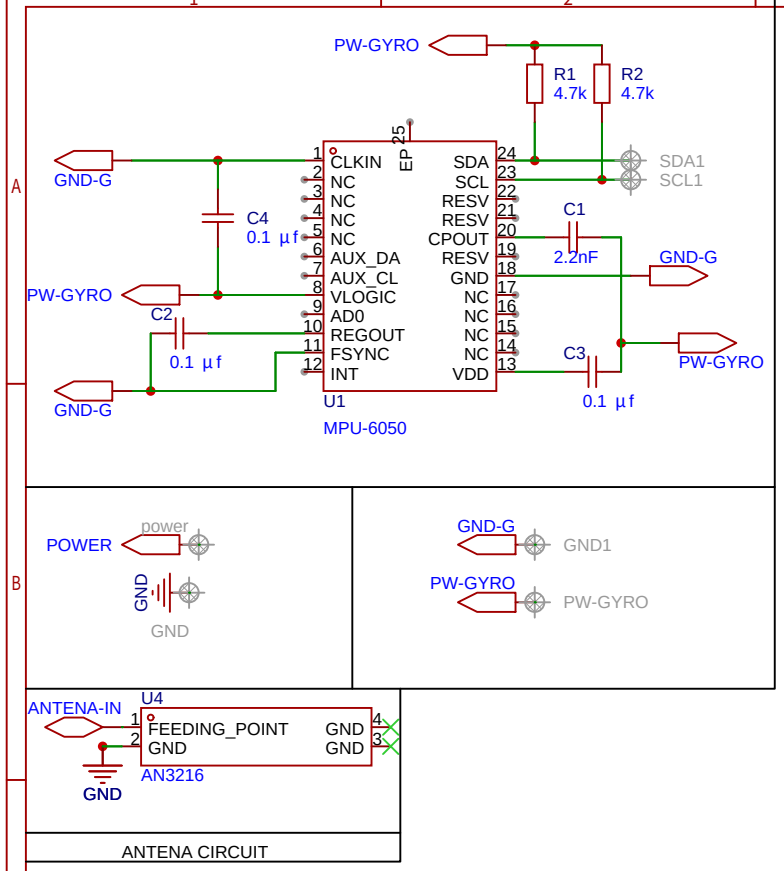

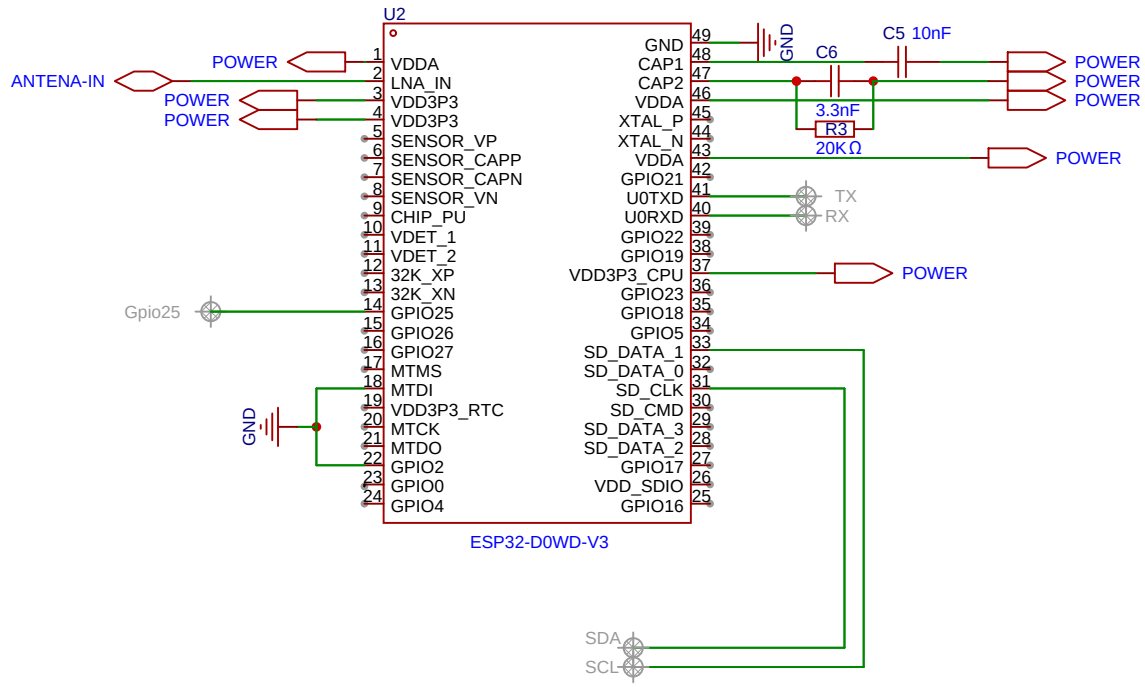

Schematic	V2	Create at	2025-05-31
		Update at	2025-06-05
Board	V2 MAINBOARD	Page	P1
Drawn		test	
Reviewed			
		Version	Size	Page 1 Total 1
EasyEDA		V1.0	A4	EasyEDA.com