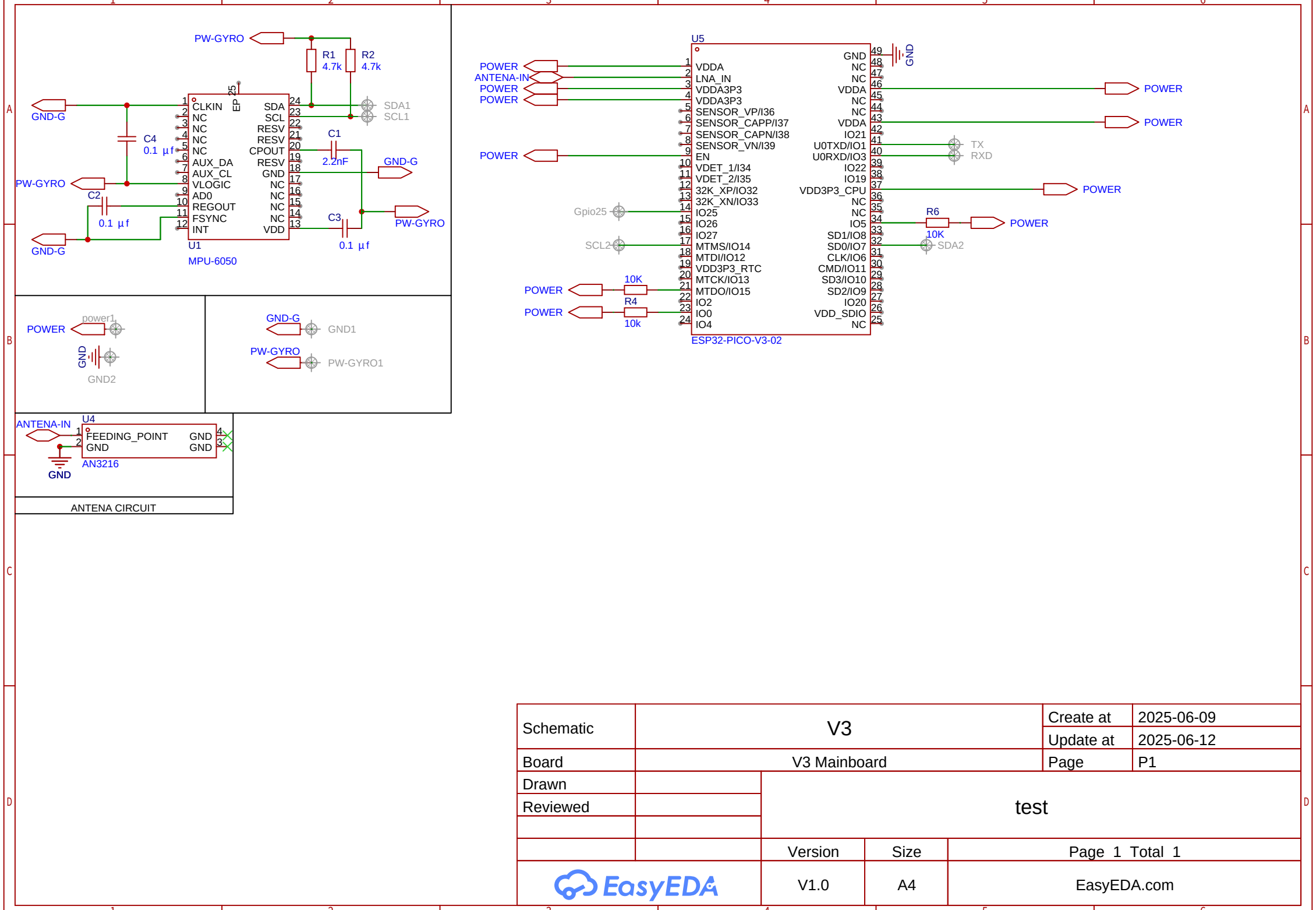

Schematic	V3	Create at	2025-06-09
		Update at	2025-06-12
Board	V3 Mainboard	Page	P1
Drawn		test	
Reviewed			
		Version	Size	Page 1 Total 1
EasyEDA		V1.0	A4	EasyEDA.com