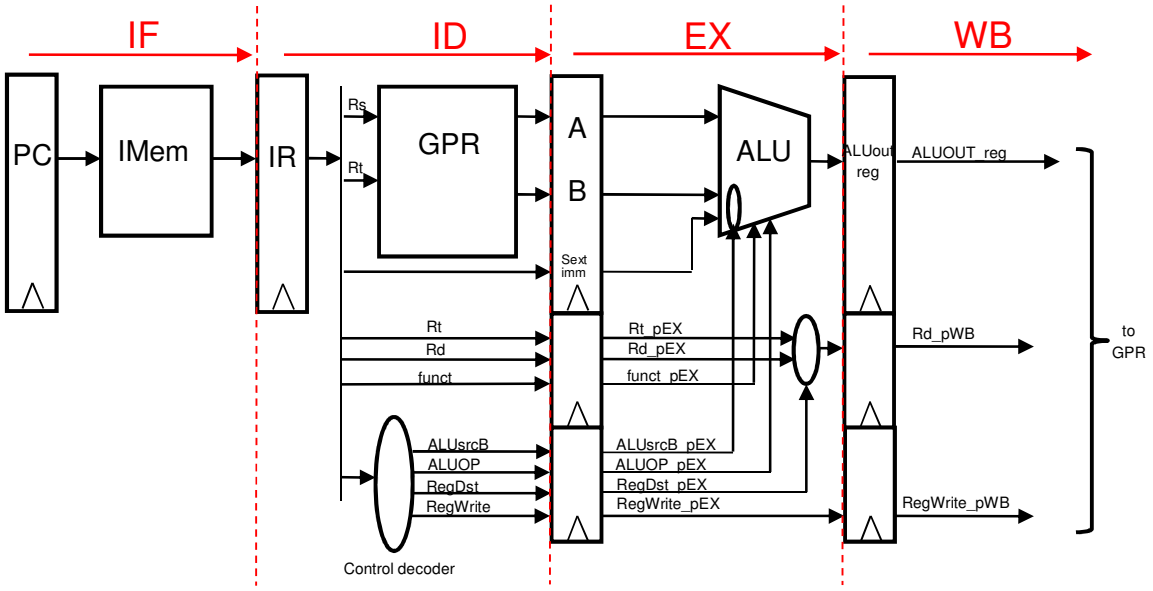

Fig. 1 – HW4 control scheme

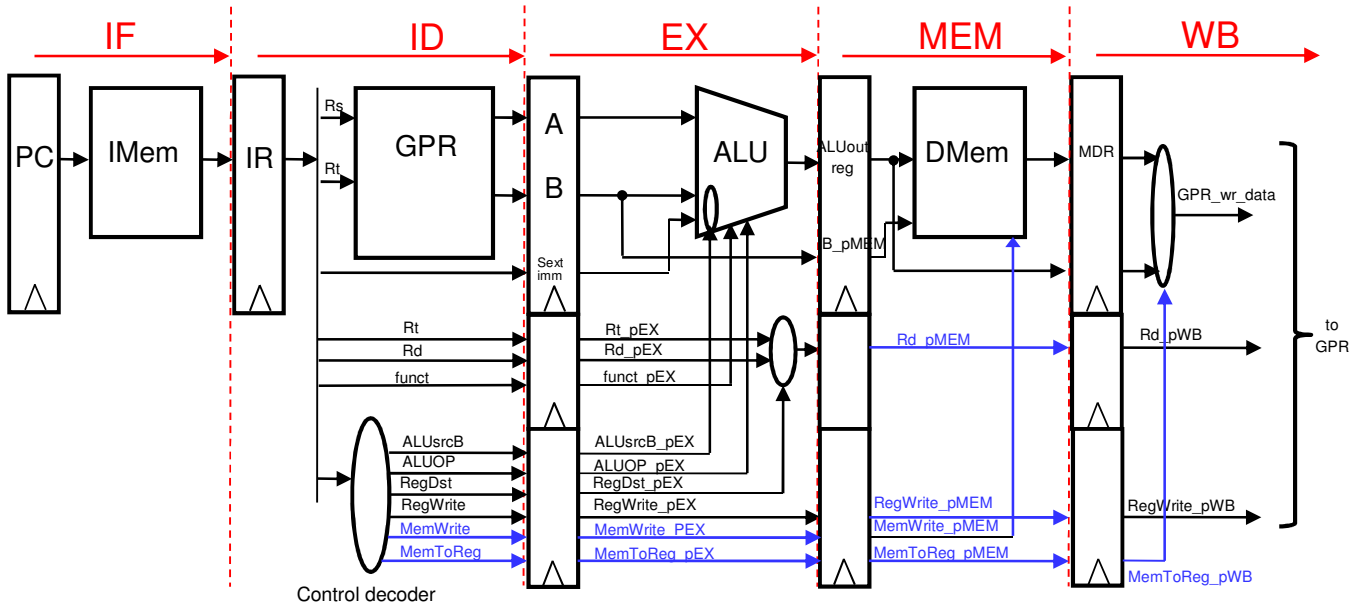

Fig. 2 – HW5 control scheme
(Additions to HW4 control signals - in blue)