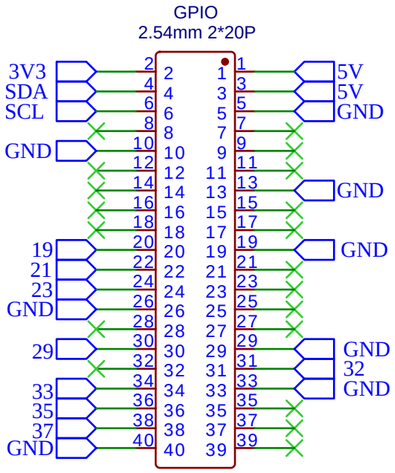

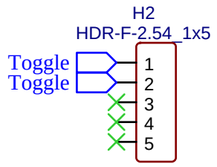

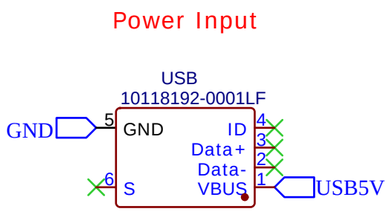

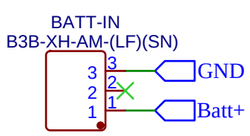

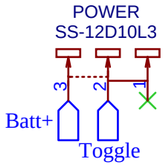

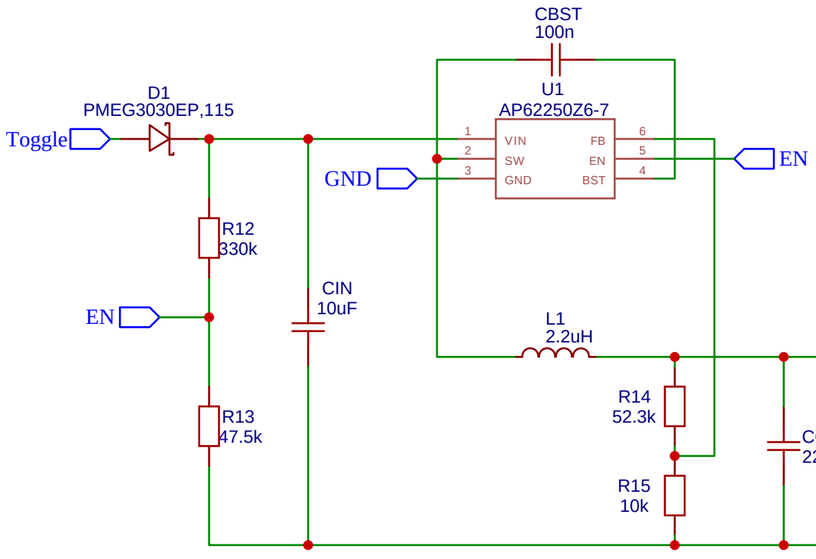

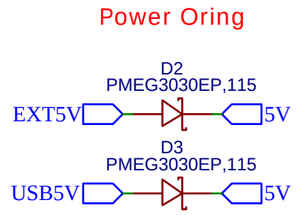

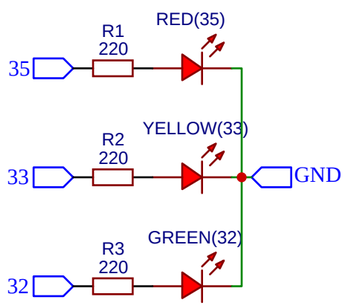

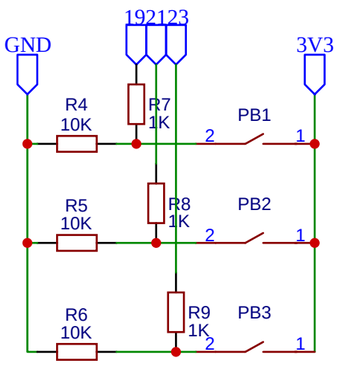

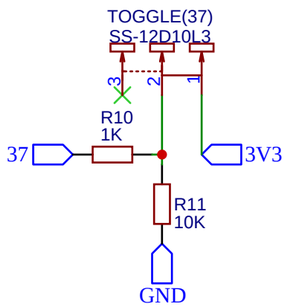

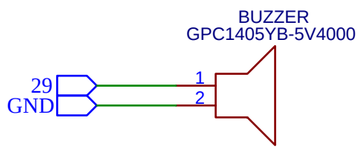

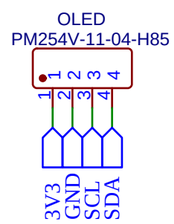

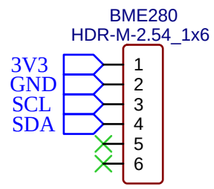

Update Notes
-Switch to AP62250Z6-7 - SOT563 SMPSU
-Include UVLO for PSU Vin
-Include micro USB B input for power brick input
-Include Oring diodes to switch between USB and battery power supply (hotswap)
-Change GPIO pin from BCM to board pins number
-Moved BME280 to Top board
-Changed several pin assignments
-Reworked TOP-BTM Interface: replaced male header with single extended header
-Removed buzzer resistor

TITLE: StemCube Top Prototype 2	REV: 2.0
Company: UMP Stem Lab	Sheet: 1/1
Date: 13/4/2022 Drawn By: Phuah Soon Eu	