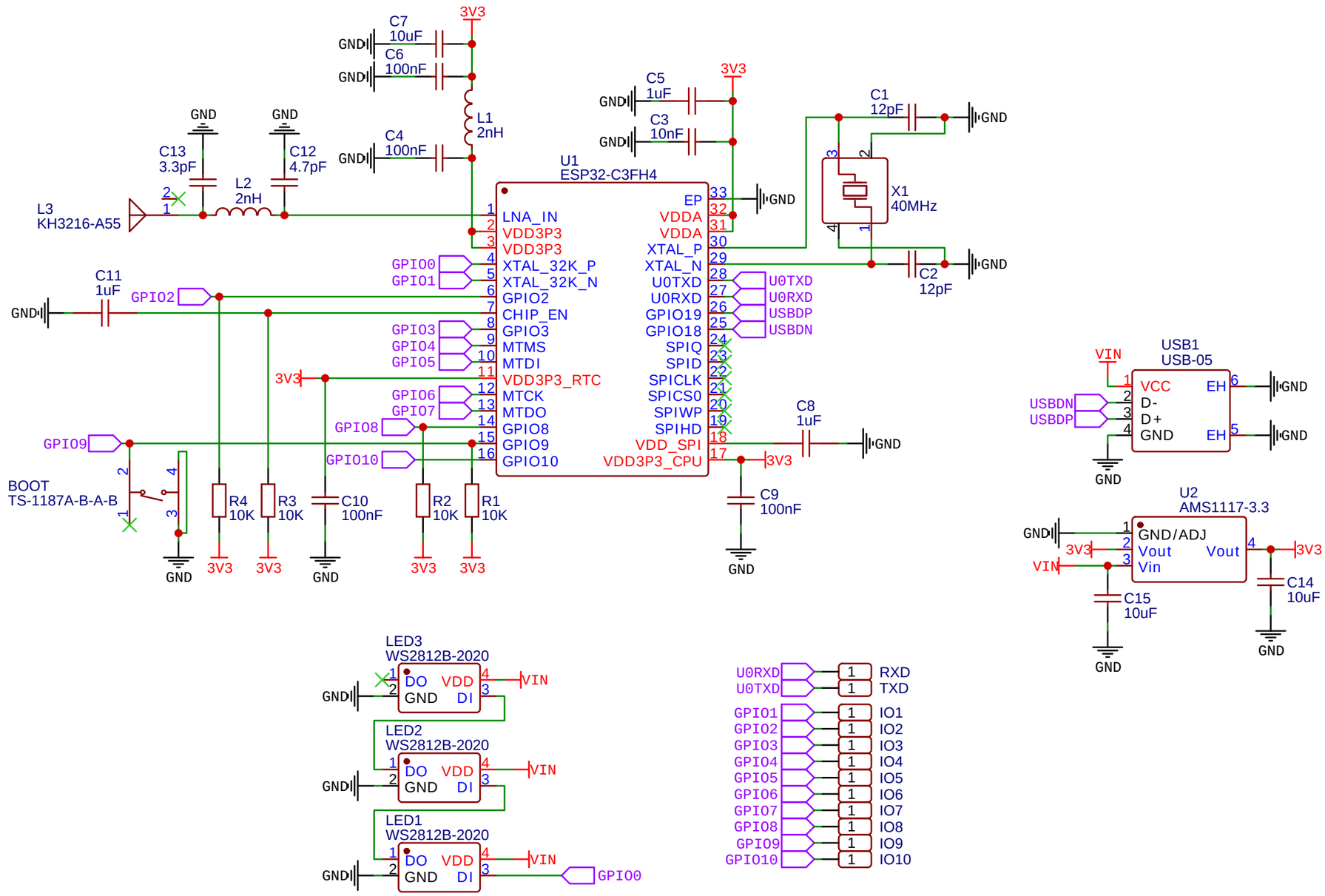

TITLE: DevC3 - Schematic		REV: 1.0
	Company: -	Sheet: 1/1
	Date: 2022-01-16 Drawn By: Arnost Trtusek	