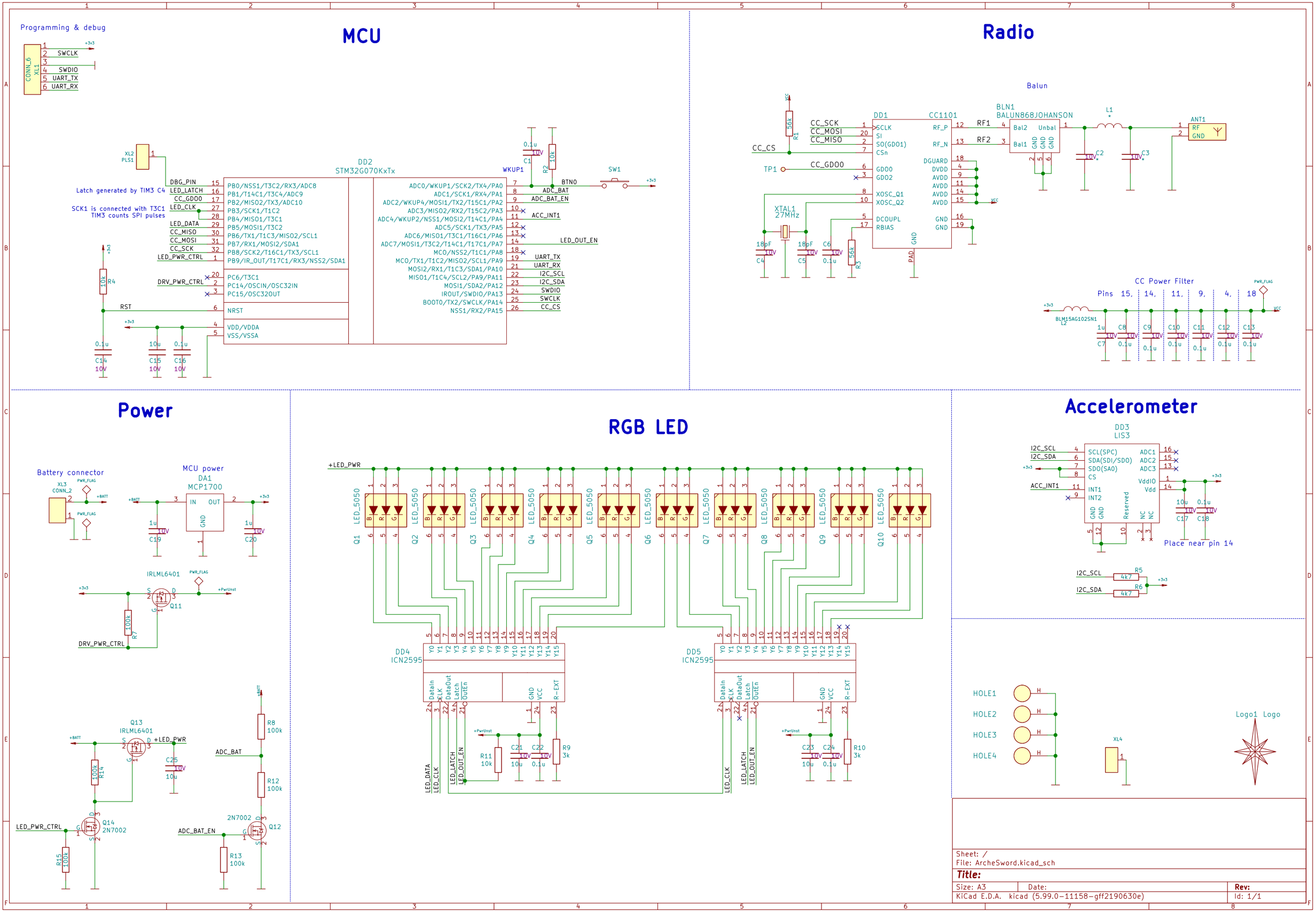
MCU
Programming & debug
CONN_6 XL1
SWCLK
SWDIO
UART_TX
UART_RX
DD2
STM32G070KxTx
Latch generated by TIM3 C4
SCK1 is connected with T3C1
TIM3 counts SPI pulses
DBG_PIN
LED_LATCH
CC_GDO0
LED_CLK
LED_DATA
CC_MISO
CC_MOSI
CC_SCK
LED_PWR_CTRL
DRV_PWR_CTRL
RST
WKUP1
BTN0
SW1
ADC_BAT
ADC_BAT_EN
ACC_INT1
LED_OUT_EN
I2C_SCL
I2C_SDA
Radio
Balun
BLN1
BALUN868JOHANSON
ANT1
DD1
CC1101
CC_CS
TP1
XTAL1
27MHz
CC Power Filter
Pins 15, 14, 11, 9, 4, 18
BLM15AG102SN1
Power
Battery connector
MCU power
DA1
MCP1700
IRLML6401
Q11
Q13
Q14
2N7002
Q12
RGB LED
+LED_PWR
LED_5050
DD4
ICN2595
DD5
ICN2595
Accelerometer
DD3
LIS3
Place near pin 14
HOLE1
HOLE2
HOLE3
HOLE4
XL4
Logo1 Logo
Sheet: /
File: ArcheSword.kicad_sch
Title:
Size: A3
Date:
Rev:
KiCad E.D.A. kicad (5.99.0-11158-gff2190630e)
Id: 1/1