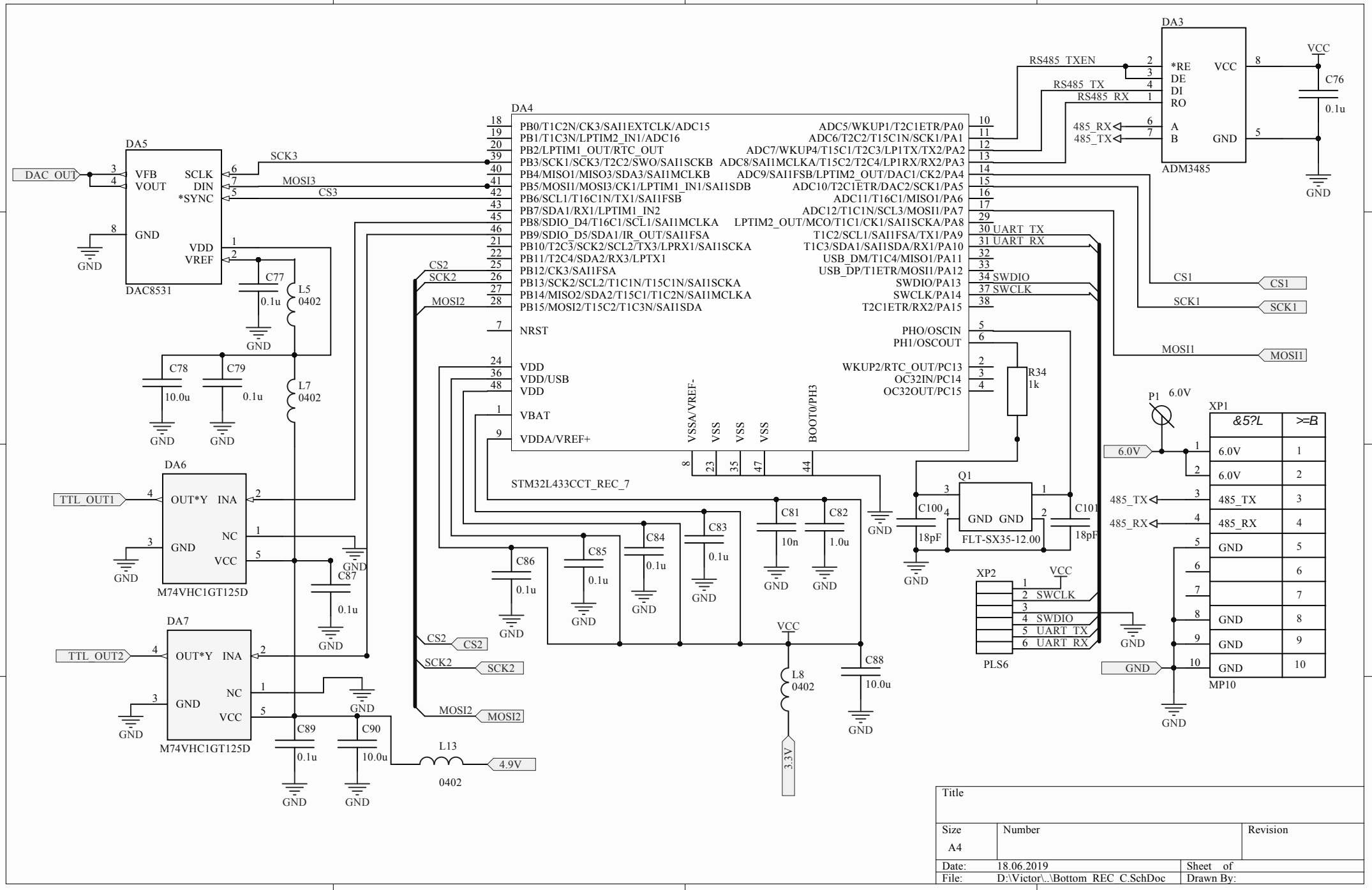
DA3
ADM3485
*RE
DE
DI
RO
A
B
VCC
GND
RS485_TXEN
RS485_TX
RS485_RX
485_RX
485_TX
C76
0.1u
DA4
STM32L433CCT_REC_7
PB0/T1C2N/CK3/SAI1EXTCLK/ADC15
PB1/T1C3N/LPTIM2_IN1/ADC16
PB2/LPTIM1_OUT/RTC_OUT
PB3/SCK1/SCK3/T2C2/SWO/SAI1SCKB
PB4/MISO1/MISO3/SDA3/SAI1MCLKB
PB5/MOSI1/MOSI3/CK1/LPTIM1_IN1/SAI1SDB
PB6/SCL1/T16C1N/TX1/SAI1FSB
PB7/SDA1/RX1/LPTIM1_IN2
PB8/SDIO_D4/T16C1/SCL1/SAI1MCLKA
PB9/SDIO_D5/SDA1/IR_OUT/SAI1FSA
PB10/T2C3/SCK2/SCL2/TX3/LPRX1/SAI1SCKA
PB11/T2C4/SDA2/RX3/LPTX1
PB12/CK3/SAI1FSA
PB13/SCK2/SCL2/T1C1N/T15C1N/SAI1SCKA
PB14/MISO2/SDA2/T15C1/T1C2N/SAI1MCLKA
PB15/MOSI2/T15C2/T1C3N/SAI1SDA
NRST
VDD
VDD/USB
VDD
VBAT
VDDA/VREF+
VSSA/VREF-
VSS
VSS
VSS
BOOT0/PH3
ADC5/WKUP1/T2C1ETR/PA0
ADC6/T2C2/T15C1N/SCK1/PA1
ADC7/WKUP4/T15C1/T2C3/LP1TX/TX2/PA2
ADC8/SAI1MCLKA/T15C2/T2C4/LP1RX/RX2/PA3
ADC9/SAI1FSB/LPTIM2_OUT/DAC1/CK2/PA4
ADC10/T2C1ETR/DAC2/SCK1/PA5
ADC11/T16C1/MISO1/PA6
ADC12/T1C1N/SCL3/MOSI1/PA7
LPTIM2_OUT/MCO/T1C1/CK1/SAI1SCKA/PA8
T1C2/SCL1/SAI1FSA/TX1/PA9
T1C3/SDA1/SAI1SDA/RX1/PA10
USB_DM/T1C4/MISO1/PA11
USB_DP/T1ETR/MOSI1/PA12
SWDIO/PA13
SWCLK/PA14
T2C1ETR/RX2/PA15
PHO/OSCIN
PH1/OSCOUT
WKUP2/RTC_OUT/PC13
OC32IN/PC14
OC32OUT/PC15
UART_TX
UART_RX
SWDIO
SWCLK
CS1
SCK1
MOSI1
CS2
SCK2
MOSI2
R34
1k
DA5
DAC8531
VFB
VOUT
SCLK
DIN
*SYNC
GND
VDD
VREF
DAC_OUT
SCK3
MOSI3
CS3
C77
0.1u
L5
0402
L7
0402
C78
10.0u
C79
0.1u
DA6
M74VHC1GT125D
OUT*Y
INA
NC
GND
VCC
TTL_OUT1
C87
0.1u
DA7
M74VHC1GT125D
TTL_OUT2
C89
0.1u
C90
10.0u
L13
0402
4.9V
C86
0.1u
C85
0.1u
C84
0.1u
C83
0.1u
C81
10n
C82
1.0u
C100
18pF
C101
18pF
Q1
FLT-SX35-12.00
GND GND
L8
0402
3.3V
C88
10.0u
XP2
PLS6
SWCLK
SWDIO
UART_TX
UART_RX
P1
6.0V
XP1
MP10
&5?L
>=B
6.0V
485_TX
485_RX
GND
Title
Size
A4
Number
Revision
Date:
18.06.2019
Sheet of
File:
D:\Victor\..\Bottom_REC_C.SchDoc
Drawn By: