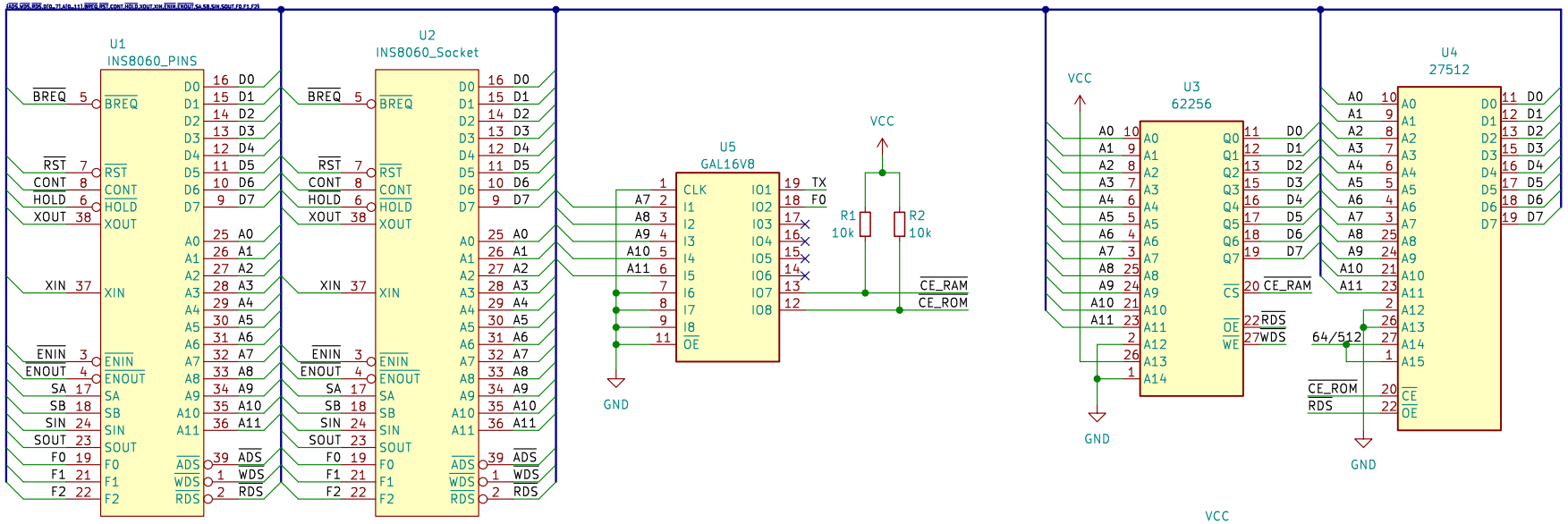

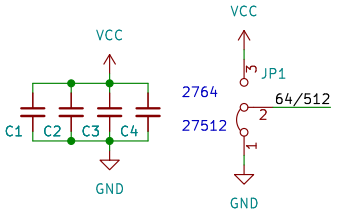

Pin#	2764	27512
1	VPP->VCC	A15->GND
2	A12->GND	A12->GND
26	NC->GND	A13->GND
27	/P->VCC	A14->GND

Optional, populate when running in "KitbugPlus" mode.

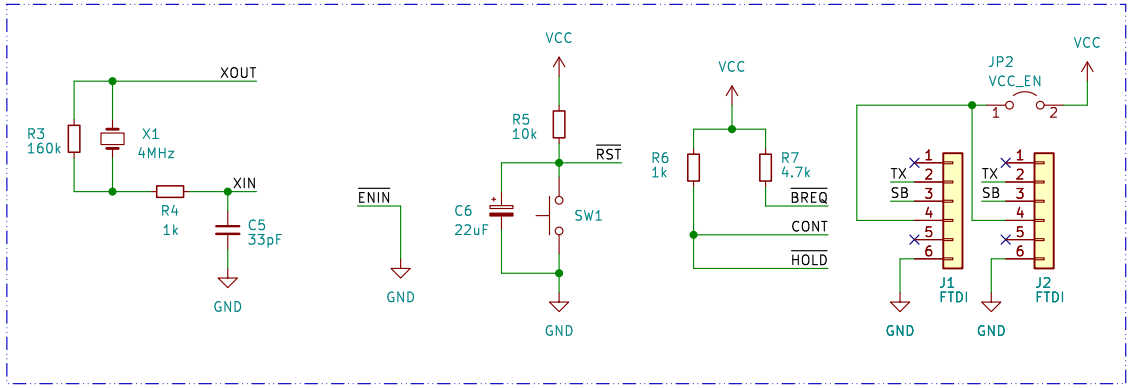

Drawn by Kris from MyGeekyHobby

Based on work of Martin from https://www.8bity.cz/
and Phil from http://philg.uk/

Sheet: /
File: MK14_EPROM_SRAM.kicad_sch

Title: MK14_EPROM_RAM_KitBug+_Adapter

Size: A4	Date: 2023-11-27	**Rev: 2.1**
KiCad E.D.A. kicad 7.0.2		Id: 1/1