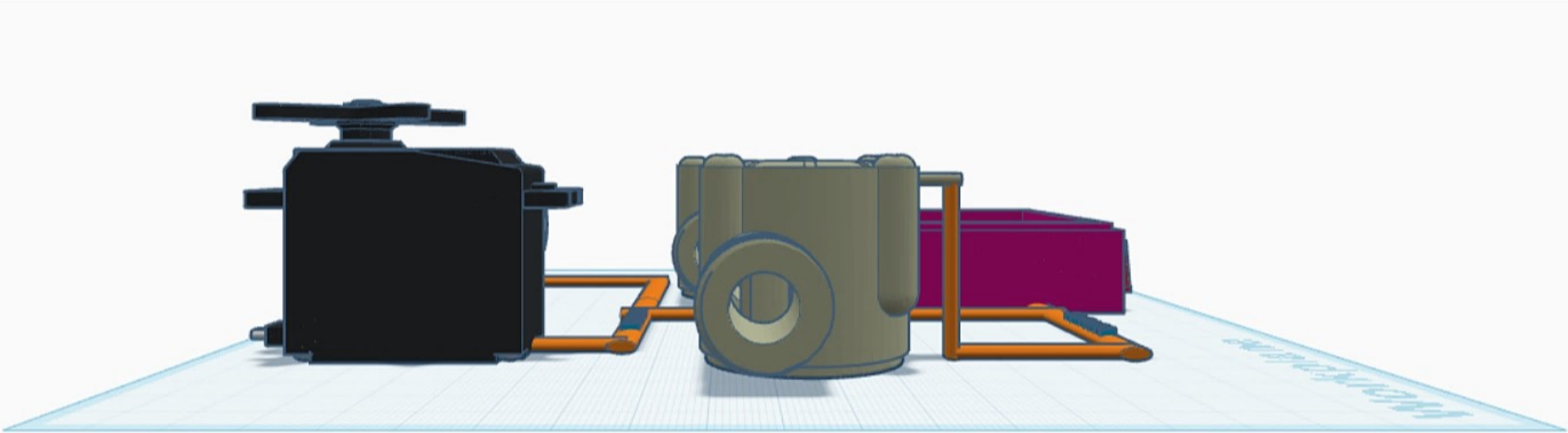

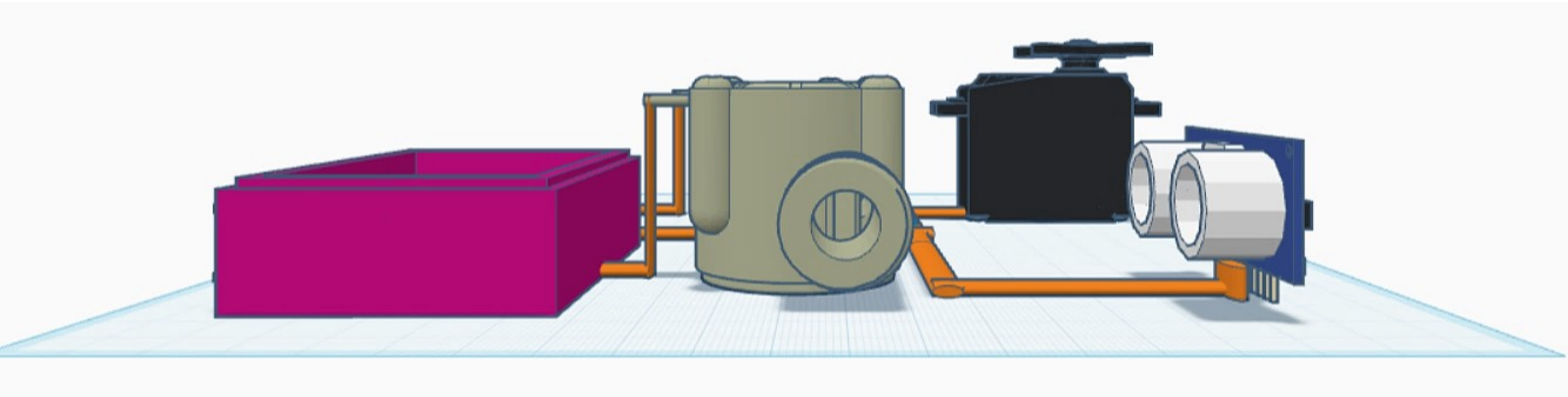

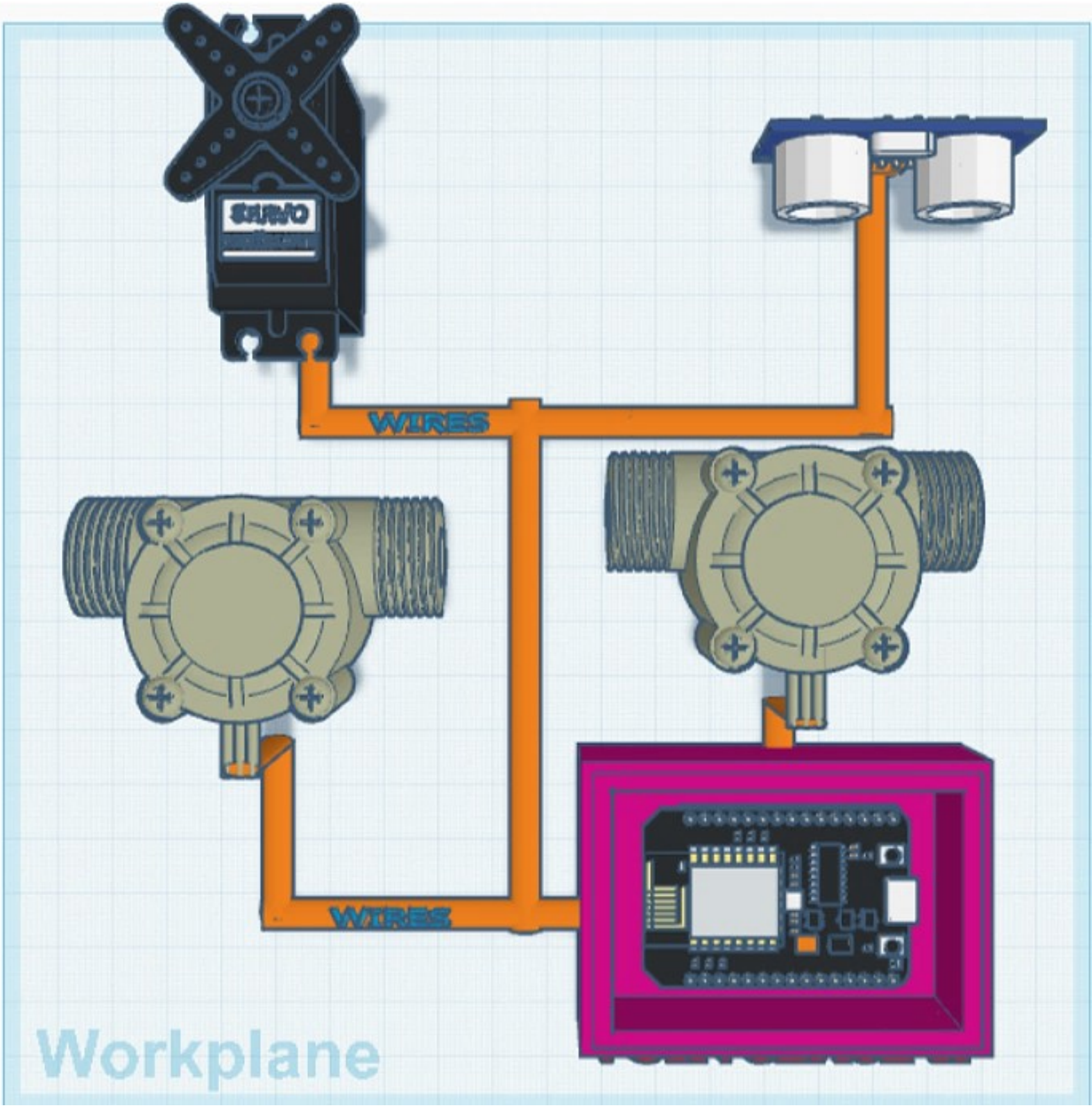
SERVO
WIRES
WIRES
Workplane

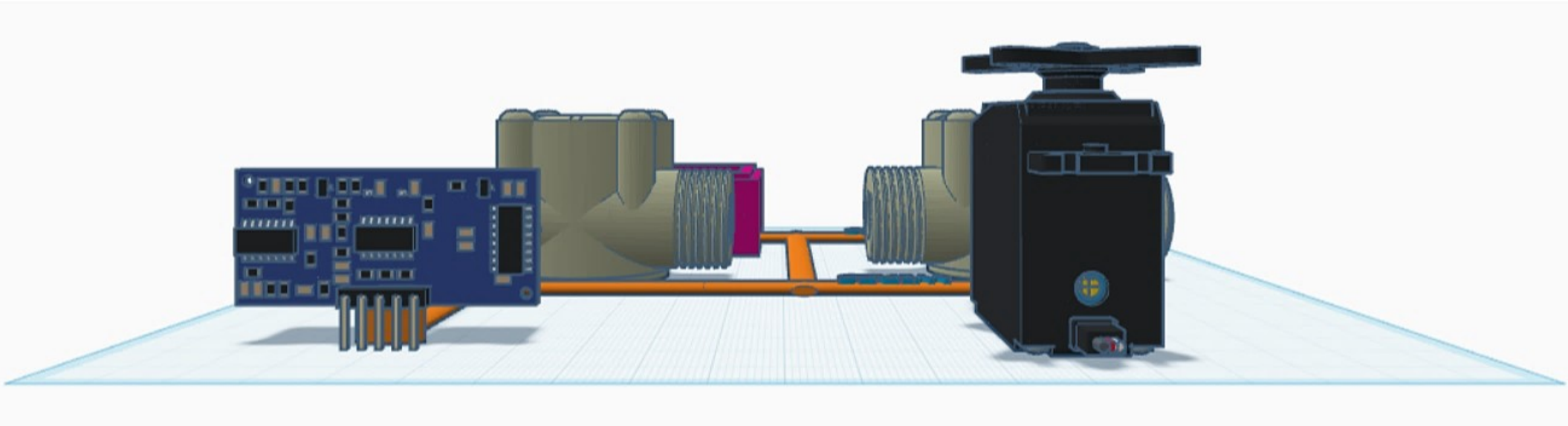

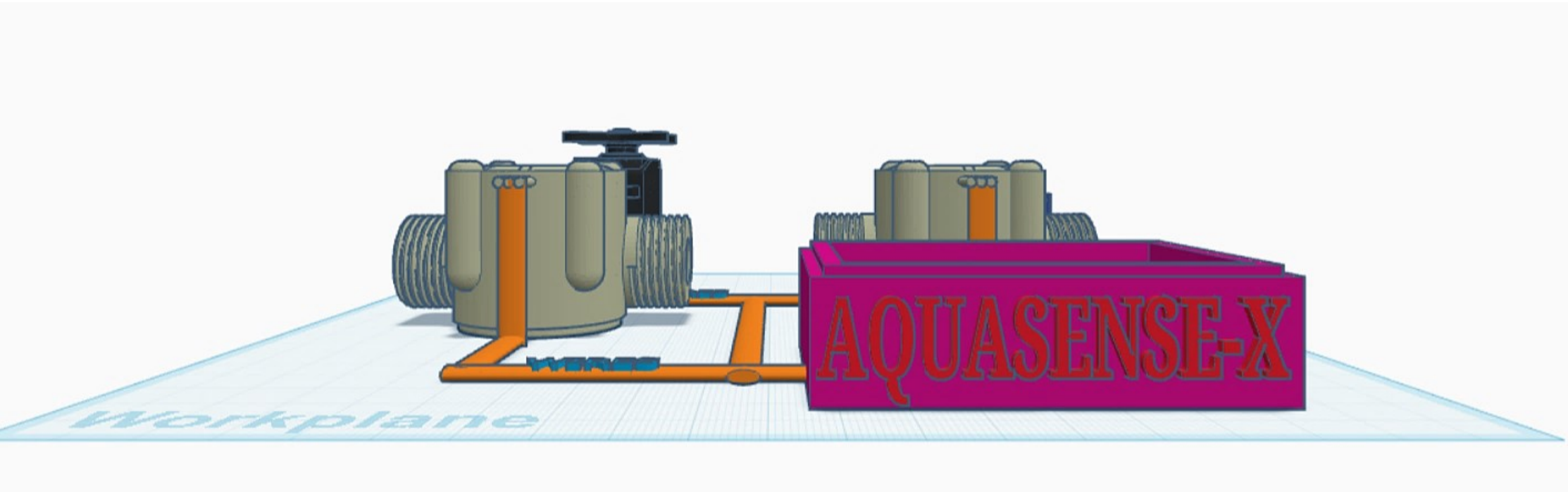
AQUASENSE-X
Workplane