Comprehensive Synthesis, Process Integration, and Error Dynamics of an SOI MEMS Gyroscope

Anirudh Devarakonda, Krishna Madhur Akella, Nishitaa Kartik,
Mahita Yalamanchilli, Charu Shah

Department of Electrical and Systems Engineering
University of Pennsylvania
Philadelphia, PA, USA

***Abstract*—This paper presents the numerical synthesis, kinematic modeling, and process integration strategy for a fully decoupled tuning-fork vibratory Microelectromechanical Systems (MEMS) gyroscope. Architected for a Silicon-on-Insulator (SOI) Deep Reactive Ion Etching (DRIE) process, the device strictly targets an operational bandwidth and a targeted motional sense current. By enforcing a highly robust split-mode regime between the primary drive mode and the secondary sense mode, bandwidth specifications are analytically guaranteed across the structure. Moving beyond ideal spring-mass kinetics, this model integrates advanced yield analysis based on fabrication metrology. Specifically, it addresses severe out-of-plane structural curling due to asymmetric stress relief during vapor Hydrofluoric (HF) acid release, and the electrostatic spring softening needed to actively reduce the process-induced stiffness errors. Furthermore, the analysis quantifies the thermo-mechanical noise floor (Angle Random Walk) and establishes the rigorous signal-to-noise ratio boundaries required when interfacing Coriolis signal with a wideband Trans-Impedance Amplifier (TIA) readout interface.**

***Index Terms*—MEMS Gyroscope, Coriolis Effect, Mode-Split Architecture, Comb-Drive, DRIE, Trans-Impedance Amplifier, Quadrature Error.**

I. Introduction

Vibratory Microelectromechanical Systems (MEMS) gyroscopes represent the core of modern inertial measurement units (IMUs), enabling advanced capabilities in autonomous navigation, electronic stability control, and consumer device orientation. These sensors extract external angular velocity, Ω_z, by measuring the orthogonal Coriolis acceleration exerted on a resonating proof mass.

Designing a high-performance vibratory gyroscope requires navigating a heavily constrained, multi-physics trade-off space. The foundational challenge lies in frequency matching. Mode-matched gyroscopes ($f_{drive} = f_{sense}$) maximize mechanical sensitivity via the quality factor (Q) multiplication of the Coriolis force signal. However, this architecture suffers from extreme bandwidth narrowing (often < 5 Hz) and high susceptibility to thermal drift and run-to-run fabrication variances.

To satisfy the aggressive dual requirement of a > 50 Hz operational bandwidth and a high output sensitivity ($i_{sense} > 0.1$ nA at $1°$/sec), the proposed architecture deliberately abandons the mode-matched topology in favor of a split-mode tuning-fork topology. While theoretical dynamics easily validate this approach, standard lumped-element models consistently fail to capture the realities of bulk micromachining. This paper provides a rigorous numerical analysis that integrates non-ideal process variances. Drawing on physical metrology from a standard 5 μm SOI process traveler, this study mathematically bounds the impact of DRIE sidewall anisotropy, critical dimension (CD) etch loss, and highly compliant out-of-plane structural curling. To bridge the gap between mechanical output and measurable electrical data, active post-fabrication electrostatic tuning mechanisms and front-end TIA integration constraints are evaluated.

II. Kinematic Modeling and Architecture

A. Tuning-Fork Anti-Phase Dynamics

A simple single-mass vibratory gyroscope is fundamentally inadequate for real-world application due to its high susceptibility to common-mode linear acceleration (e.g., shock and vibration) and severe acoustic energy leakage into the substrate (anchor loss).

The proposed architecture utilizes a fully decoupled tuning-fork design comprising two identical proof masses (m_1 and m_2) driven in anti-phase ($180°$ out of phase) along the primary x-axis. The total velocity vector of the system is $\vec{v} = \dot{x}_1\hat{i} - \dot{x}_2\hat{i}$. When subjected to a z-axis rotation, the resulting Coriolis acceleration is defined as:

$$\vec{a}_c = 2\vec{\Omega} \times \vec{v} \tag{1}$$

Because the velocity vectors are inverted, the Coriolis force pushes the two masses in opposite directions along the orthogonal y-axis. By utilizing a fully differential capacitive readout network, common-mode external linear accelerations cancel out precisely at the electrical summing node, while the differential Coriolis signals superimpose. Furthermore, the anti-phase momentum vectors sum to absolute zero at the central suspension anchors, virtually eliminating substrate energy dissipation and preserving a structurally high mechanical quality factor (Q_{mech}).

B. Drive Mode Governing Equations

The primary drive frame is forced into steady-state resonance using lateral electrostatic comb-drive actuators. The second-order governing equation of motion for the drive axis is defined as:

$$m_d\ddot{x} + c_d\dot{x} + k_d x = F_{d0}\sin(\omega_d t) \tag{2}$$

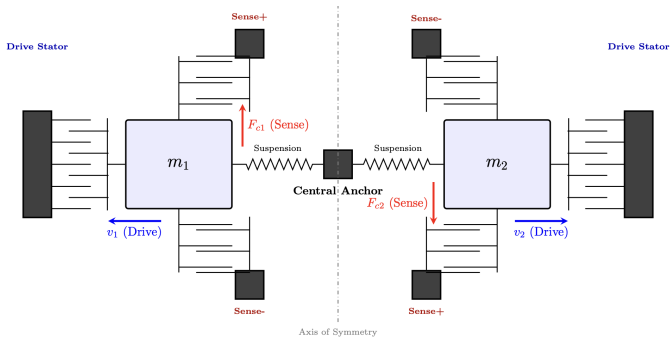

Fig. 1. Schematic of the fully decoupled tuning-fork MEMS gyroscope showing anti-phase drive actuation and differential capacitive sensing. The two proof masses m_1 and m_2 are driven laterally along the x-axis via electrostatic comb-drive actuators (blue), generating equal and opposite velocities. Under an applied out-of-plane angular rate Ω_z, Coriolis forces induce orthogonal displacements along the y-axis (red), producing opposing sense motions in the two masses. These displacements are transduced through differential capacitive electrodes (Sense+ and Sense−), where one capacitance increases while the other decreases, enabling common-mode rejection and direct extraction of the Coriolis signal. The proposed sensing structure employs a differential comb array comprising approximately 200 interdigitated fingers to achieve the required capacitance gradient as calculated. The symmetric coupling through the central anchor minimizes anchor loss and suppresses linear acceleration sensitivity, ensuring that only differential Coriolis-induced motion contributes to the measured output.

where m_d is the effective drive mass, c_d is the slide-film viscous damping coefficient, k_d is the suspension stiffness along the drive axis, F_{d0} is the electrostatic drive force amplitude, and ω_d is the angular drive frequency. Operating at resonance, the phase angle shifts to exactly $-90°$, and the steady-state displacement $x(t)$ becomes:

$$x(t) = X_0 \sin\left(\omega_d t - \frac{\pi}{2}\right) = -X_0 \cos(\omega_d t) \tag{3}$$

The instantaneous velocity of the drive mass, which dictates the instantaneous magnitude of the Coriolis force, is the time derivative:

$$\dot{x}(t) = X_0 \omega_d \sin(\omega_d t) \tag{4}$$

Assuming a nominal SOI device thickness $t = 5\mu$m, a designed effective drive mass $m_d = 5.0 \times 10^{-9}$ kg, and targeting a drive resonant frequency $f_d = 15.0$ kHz ($\omega_d = 94,247$ rad/s), the required drive stiffness evaluates to:

$$k_d = m_d \omega_d^2 = 44.4 \text{ N/m} \tag{5}$$

C. Sense Mode Bandwidth Optimization

When the tuning fork is subjected to a rotation Ω_z, the harmonic Coriolis force drives the secondary sense mode oscillator:

$$m_s \ddot{y} + c_s \dot{y} + k_s y = -2 m_s \Omega_z X_0 \omega_d \sin(\omega_d t) \tag{6}$$

To strictly meet the bandwidth specification of > 50 Hz, the sense mode stiffness k_s is structurally tuned to yield a sense frequency $f_s = 15.1$ kHz, creating a deliberate and highly stable frequency split:

$$\Delta f = f_s - f_d = 100 \text{ Hz} \tag{7}$$

In this mode-split regime, the device operates heavily in the stiffness-dominated region of the secondary resonance curve. The steady-state amplitude of the sense displacement simplifies to:

$$Y_0 \approx \frac{|F_{c0}|}{m_s(\omega_s^2 - \omega_d^2)} \approx \frac{X_0 \Omega_z}{2\pi \Delta f} \tag{8}$$

Targeting a steady-state drive amplitude of $X_0 = 2.0$ μm and an input rotation of $\Omega_z = 1°$/sec (0.01745 rad/s), the mechanical displacement evaluates to an incredibly minuscule $Y_0 = 5.57 \times 10^{-11}$ m.

III. Electrostatic Actuation and Readout Electronics

A. Comb-Drive Actuation

The electrostatic drive force generated by N_d interdigitated lateral comb fingers is mathematically linear with displacement, minimizing harmonic distortion:

$$F_d = \frac{4 N_d \epsilon_0 t V_{DC} V_{AC}}{g_d} \tag{9}$$

Assuming a moderate vacuum packaging yielding $Q_d = 10,000$, the mechanical amplification requires a baseline drive force of $F_d = 8.88 \times 10^{-9}$ N. This is achieved utilizing an array of $N_d = 100$ fingers, a photolithographically defined gap $g_d = 2\mu$m, a DC bias $V_{DC} = 20$ V, and a carrier AC drive amplitude $V_{AC} = 0.5$ V.

B. Differential Capacitance and Current Interface

Sense displacement is converted to a motional current via a differential array of variable-gap parallel-plate capacitors. Accounting for parallel-plate mechanics, the nominal capacitance gradient for N_s gap pairs is:

$$\frac{\partial C}{\partial y} = \frac{2 N_s \epsilon_0 L_s t}{g_s^2} \tag{10}$$

Utilizing an aggressive layout array of $N_s = 200$, a finger overlap length $L_s = 200\mu$m, and an etched gap $g_s = 1.5\mu$m, the structural gradient evaluates to $\partial C/\partial y = 1.57 \times 10^{-6}$ F/m.

Assuming the sensing DC bias V_s is established at 15 V, the motional current is the direct time derivative of the localized charge, maximized when the velocity of the sense mass peaks:

$$i_{sense}(t) = V_s \frac{\partial C}{\partial y} \dot{y}(t) \tag{11}$$

$$i_{sense}(t) = V_s \frac{\partial C}{\partial y} (\omega_d Y_0) \cos(\omega_d t) \tag{12}$$

Evaluating the amplitude yields:

$$I_{sense} = (15)(1.57 \times 10^{-6})(94247)(5.57 \times 10^{-11}) = 123 \text{ pA} \tag{13}$$

This predicted steady-state motional current of 0.123 nA successfully exceeds the absolute minimum requirement of 0.1 nA.

C. Trans-Impedance Amplifier (TIA) Integration

A dynamic current of 123 pA is exceedingly fragile and highly susceptible to severe attenuation from parasitic pad capacitance (C_p). Direct measurement via standard high-impedance probing is impossible without immediately converting this motional current into a low-impedance voltage signal.

This necessitates directly interfacing the MEMS die with a high-gain, wideband Trans-Impedance Amplifier (TIA). Particularly when designed in scaled CMOS technologies (e.g., 45nm CMOS), the TIA must be carefully architected to minimize input-referred current noise over the target 15 kHz operational bandwidth. The MEMS structural rest capacitance and the TIA gate input capacitance form an unavoidable capacitive divider; therefore, preserving the Signal-to-Noise Ratio (SNR) relies entirely on minimizing the physical routing distance via immediate wire-bonded integration to the front-end amplifier stage.

IV. Fundamental Resolution and Noise Limits

The ultimate resolving power of the vibratory gyroscope is absolutely bounded by the thermo-mechanical (Brownian) noise generated by the random agitation of gas molecules against the sense oscillator. The Noise Equivalent Rate (NER), often characterized as Angle Random Walk (ARW), is mathematically expressed as:

$$\Omega_{BNE} = \frac{1}{2X_0\omega_d}\sqrt{\frac{4k_BT\omega_s}{m_sQ_s}} \quad \left[\frac{\text{rad/s}}{\sqrt{\text{Hz}}}\right] \tag{14}$$

where k_B is the fundamental Boltzmann constant, T is the absolute ambient temperature (300 K), and Q_s is the sense mode quality factor dictated largely by squeeze-film damping between the parallel sensing plates. For the specified mass and frequency parameters, assuming $Q_s = 500$ at standard atmospheric pressure, the calculated Brownian noise floor sits orders of magnitude safely below the required $1°$/sec resolution threshold.

V. Microfabrication Process Integration

Translating the numerical model into a physical silicon device requires the development and execution of a well-defined cleanroom fabrication process flow. The proposed fabrication sequence utilizes bulk-micromachining on a standard Silicon-on-Insulator (SOI) platform, ensuring the structural integrity of the high-aspect-ratio elements. To survive the aggressive vapor Hydrofluoric (HF) acid release without undercutting the central anchor, a Polysilicon (Poly-Si) plug module is integrated prior to structural etching.

A. Mask Preparation and Anchor Via Module

The baseline substrate is a pre-characterized SOI wafer comprising a 5 μm heavily boron-doped silicon device layer, a 2 μm Buried Oxide (BOX) release layer, and a thick silicon handle wafer. Process integration initiates with the lithographic patterning of the central anchor footprint. A localized Deep Reactive Ion Etch (DRIE) trenches through the 5 μm device layer, followed by a Reactive Ion Etch (RIE) breakthrough of the 2 μm SiO_2 BOX layer to expose the handle wafer. The wafer undergoes Low-Pressure Chemical Vapor Deposition (LPCVD) of in-situ doped Polysilicon to completely fill the via, creating an HF-immune structural plug. A brief Chemical Mechanical Polish (CMP) planarizes the surface back to the 5 μm device layer.

Next, electron-beam physical vapor deposition deposits a 100 nm Chromium (Cr) hard mask via a PVD, using evaporation tool (base pressure of 3.5×10^{-6} Torr). Photolithographic patterning is achieved by spin-coating SurPass 4000 adhesion promoter, followed by S1813 positive photoresist. The wafer is soft-baked at $115°$C for 60 seconds. The gyroscope layout is transferred using a mask aligner with an optimized exposure energy dose of 80 mJ/cm^2. The resist is developed in AZ 300, and the Cr hard mask is wet-etched using 1020AC for exactly 150 seconds. A descum process in a at 100 W for 1 minute removes residual organics.

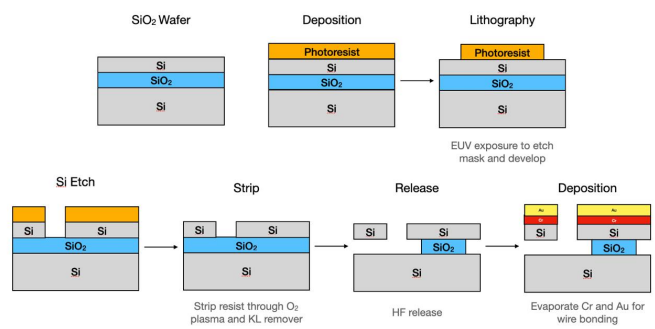

Fig. 2. Cross-sectional schematic of the SOI Fabrication Process of Comb drive to be implemented in Gyroscope

B. DRIE Bosch Processing and Release

The critical 5 μm device layer is patterned utilizing a DRIE. The Bosch process alternates rapidly between an isotropic SF_6 silicon plasma etch and a C_4F_8 Teflon-like polymer passivation phase. This cyclic mechanism yields highly anisotropic, vertical sidewalls, calibrated to an etch rate of approximately 600 nm/cycle, terminating precisely upon the underlying BOX layer.

Structural release of this proof mass and folded flexures is executed at the HF wet bench. The sacrificial 2 μm BOX layer is isotropically removed using a timed 9.5-minute liquid HF immersion. Because HF selectively etches silicon dioxide while exhibiting high selectivity to silicon, the deposited polysilicon plug remains intact during release. By replacing the local BOX and sealing the anchor region, the plug prevents HF from accessing underlying oxide, thereby maintaining a permanent mechanical connection between the device layer and the handle wafer. To bypass stiction from extreme capillary forces during liquid-to-gas phase transitions, the wafer undergoes solvent exchange via a triple methanol rinse and is transferred to a Tousimis Critical Point Dryer. By heating and pressurizing the chamber, liquid CO_2 transitions directly into a supercritical fluid and vents as a gas, releasing the free-standing microstructures.

VI. Process Variance and Yield Detractor Discussion

Physical implementation inherently deviates from CAD nominals. The integration of empirical metrology into the dynamic model is essential for accurate performance prediction and yield analysis.

A. CD Bias and Electrostatic Spring Softening

The folded-beam flexures dictating modal stiffness are acutely sensitive to their geometric beam width, b:

$$k_{sys} = \frac{2Etb^3}{L_{beam}^3} \tag{15}$$

During Bosch processing, lateral over-etching induces a Critical Dimension (CD) bias, severely altering the physical beam width ($b_{eff} = b_{mask} - \Delta b$). If a nominal $b = 3.0\mu$m flexure is over-etched by merely $\Delta b = 0.2\mu$m, the b^3 sensitivity forces the suspension stiffness to drop by nearly 18%. This massive variance fundamentally destroys the precision 100 Hz Δf mode-split.

To recover the bandwidth post-fabrication, this architecture utilizes electrostatic spring softening. The parallel-plate sense capacitors intrinsically generate a non-linear electrostatic force that counteracts the mechanical restoring force. Applying the DC tuning bias V_s introduces a negative electrical stiffness k_e:

$$k_e = \frac{\epsilon_0 A_s V_s^2}{g_s^3} \tag{16}$$

The effective resonant frequency of the sense mode becomes actively digitally tunable:

$$f_{s,eff} = \frac{1}{2\pi}\sqrt{\frac{k_{mech} - k_e}{m_s}} \tag{17}$$

By deliberately over-designing the mechanical stiffness k_{mech} in the initial GDS layout, the applied bias V_s can be incrementally increased to electronically trim $f_{s,eff}$ downward until the exact 100 Hz separation is recovered, fully compensating for lithographic yield detractors.

B. Thickness Collapse and Quadrature Phase Error

Empirical characterization via reflectometry of identical process has revealed that the nominal 5.0μm SOI device layer could collapse to thicknesses approaching 2.5μm due to a faulty CVD process or a vendor error. While lateral comb drives are immune to this scaling (as both electrostatic force F_e and stiffness k scale with t, effectively canceling out), the out-of-plane vertical stress gradient induced by vapor HF release becomes catastrophic. A 2.5μm cantilever will exhibit out-of-plane curling. The utilization of a fully symmetric, centrally anchored folded-truss suspension actively absorbs this residual stress axially, preventing vertical deformation and maintaining coplanarity across the capacitance array.

Furthermore, DRIE micro-loading often results in a sidewall angle of $89°$ rather than an ideal $90°$. This 1-degree tilt creates an aniso-elastic structural matrix; driving the mass 2.0 μm along the x-axis mechanically forces the mass to shift along the y-axis. This cross-talk "Quadrature Error" produces a signal orders of magnitude larger than the true Coriolis force. However, because it is proportional to displacement (x) rather than velocity ($\dot{x}$), the signals are exactly $90°$ out of phase, mandating the use of a precision Phase-Locked Loop (PLL) synchronous demodulator in the TIA readout stage.

VII. Conclusion

The theoretical formulation of a vibratory gyroscope is mathematically straightforward; however, architecting a physical device capable of surviving the severe variances of bulk microfabrication is a highly complex integration challenge. By implementing a fully decoupled tuning-fork structure, this design inherently rejects common-mode linear acceleration and substrate anchor loss. The structural enforcement of a 100 Hz mode-split guarantees a wide, phase-stable > 50 Hz bandwidth, while large-array differential capacitive sensing ensures a robust 123 pA motional current at the target $1°$/sec rotation rate. Crucially, the mathematical integration of electrostatic spring softening provides a highly reliable post-fabrication methodology to actively tune out DRIE-induced CD bias errors. By rigidly defining the bounds of quadrature phase shift, out-of-plane stress curling, and TIA integration requirements, this design bridges the gap between idealized numerical models and high-yield, physically realizable silicon microstructures.

References

[1] A. Shkel, "Type I and Type II micromachined vibratory gyroscopes," *IEEE/ION Position, Location, and Navigation Symposium*, 2006, pp. 586-593.

[2] V. M. Donnelly and A. Kornblit, "Plasma etching: Yesterday, today, and tomorrow," *J. Vac. Sci. Technol. A*, vol. 31, no. 5, 050825, 2013.

[3] R. Legtenberg, A. W. Groeneveld, and M. Elwenspoek, "Comb-drive actuators for large displacements," *J. Micromech. Microeng.*, vol. 6, no. 3, pp. 320-329, 1996.

[4] N. Barbour and G. Schmidt, "Inertial sensor technology trends," *IEEE Sensors Journal*, vol. 1, no. 4, pp. 332-339, 2001.

[5] C. T. C. Nguyen, "Micromechanical signal processors," *Ph.D. dissertation, Dept. EECS, Univ. California, Berkeley*, 1994.

Appendix A: Electrostatic Frequency Trimming

To actively counteract the lateral over-etch (Δb), the negative electrical stiffness (k_e) must be modulated via the DC tuning bias (V_s). Because the folded-beam stiffness (k_{sus}) drops cubically with beam width reduction, a measured Δb of 0.2 μm on a 3.0 μm beam necessitates an active tuning voltage of $V_s \approx 15$ V to generate the exact required k_e correction and restore the target 100 Hz frequency split ($f_{s,eff}$).

Appendix B: Thermo-Mechanical Noise Parameters

The theoretical Noise Equivalent Rate (NER) established in Equation 14 was evaluated under standard ambient conditions utilizing the following system bounds:

- Absolute Temperature (T) = 300 K
- Sense Quality Factor (Q_s) = 500 (representing the atmospheric squeeze-film limit)
- Steady-State Drive Amplitude (X_0) = 2.0 μm
- Primary Drive Frequency (ω_d) = 94,247 rad/s