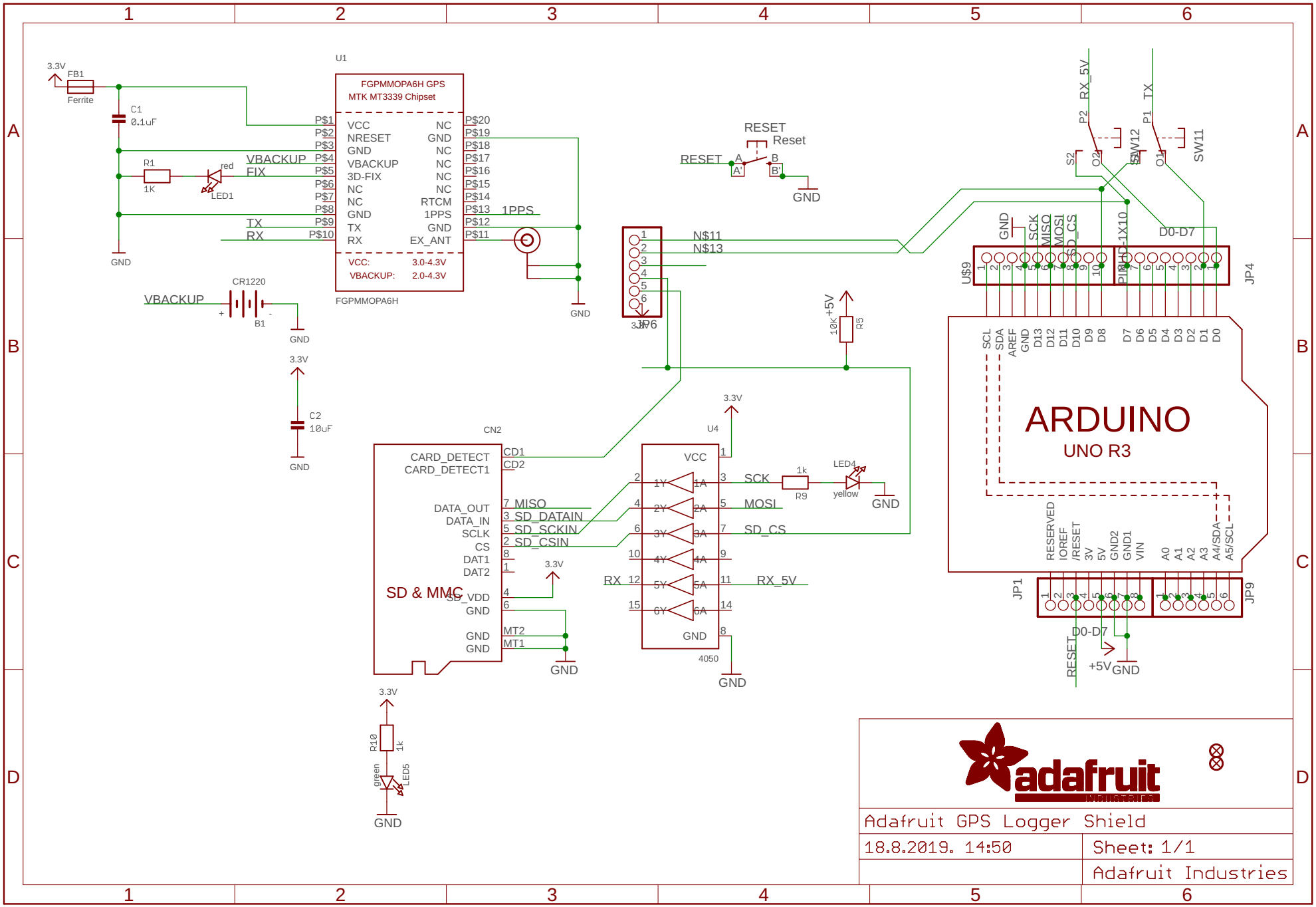

Adafruit GPS Logger Shield

18.8.2019. 14:50

Sheet: 1/1

Adafruit Industries