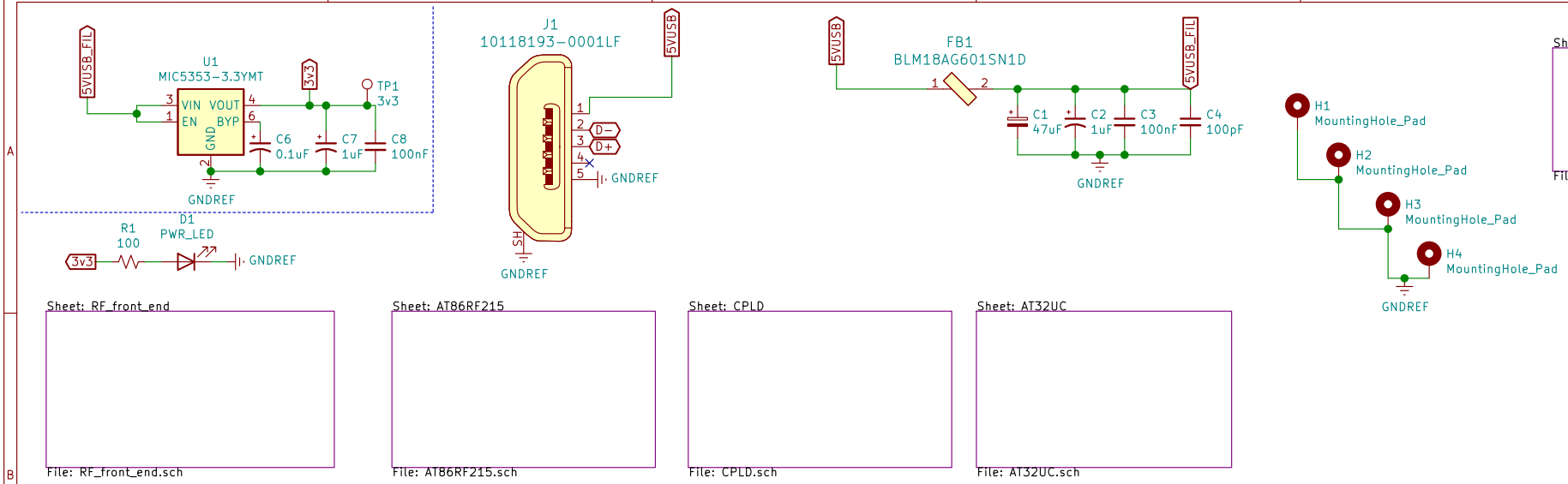

Sheet: /
File: baby_SDR.sch

Title: babySDR – Software defined Radio

Size: A4	Date: 2021-06-24	**Rev: v1.0**
KiCad E.D.A. kicad (5.1.9)-1		Id: 1/6

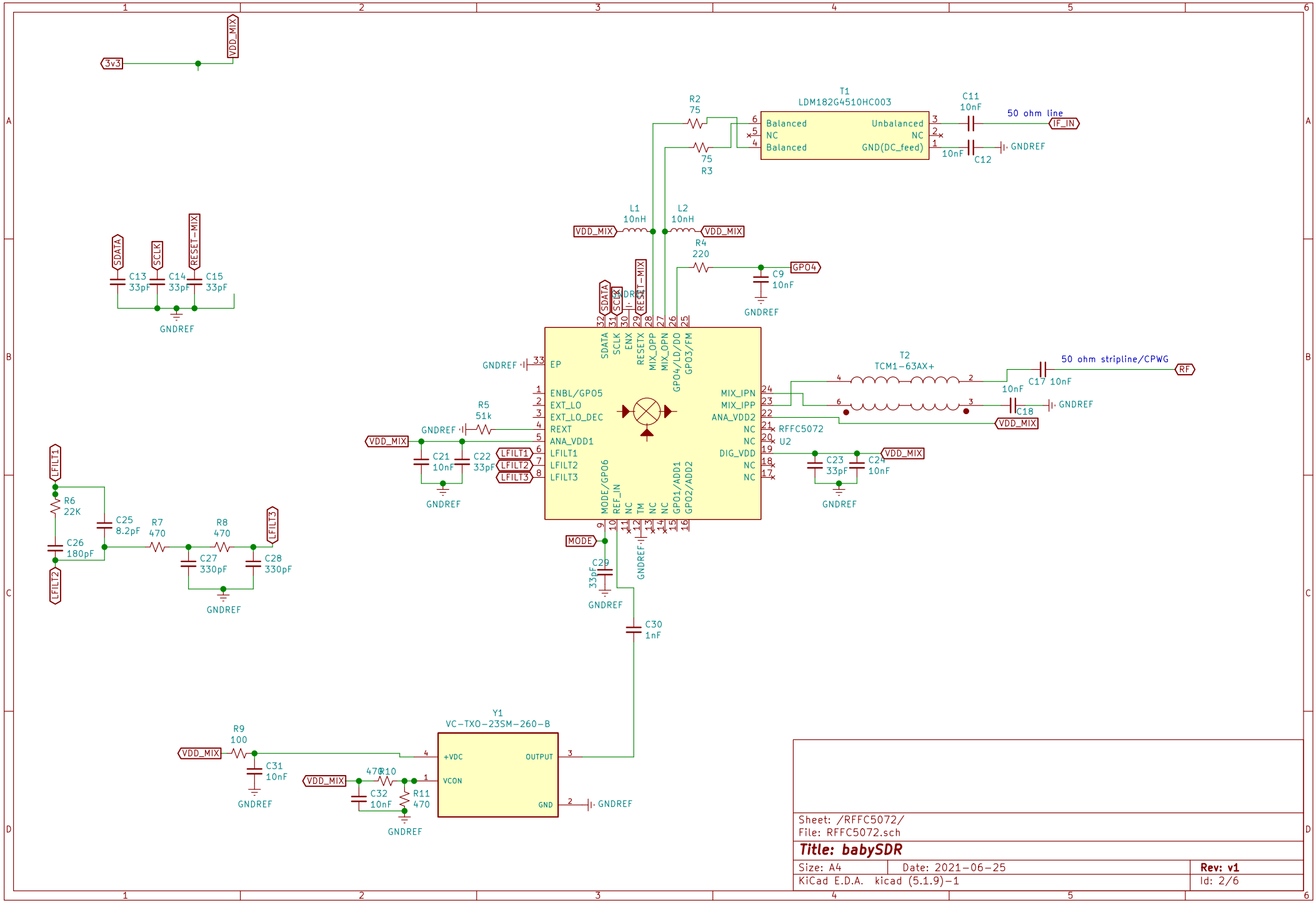

Sheet: /RFFC5072/
File: RFFC5072.sch

Title: babySDR

Size: A4	Date: 2021-06-25	Rev: v1
KiCad E.D.A. kicad (5.1.9)-1		Id: 2/6

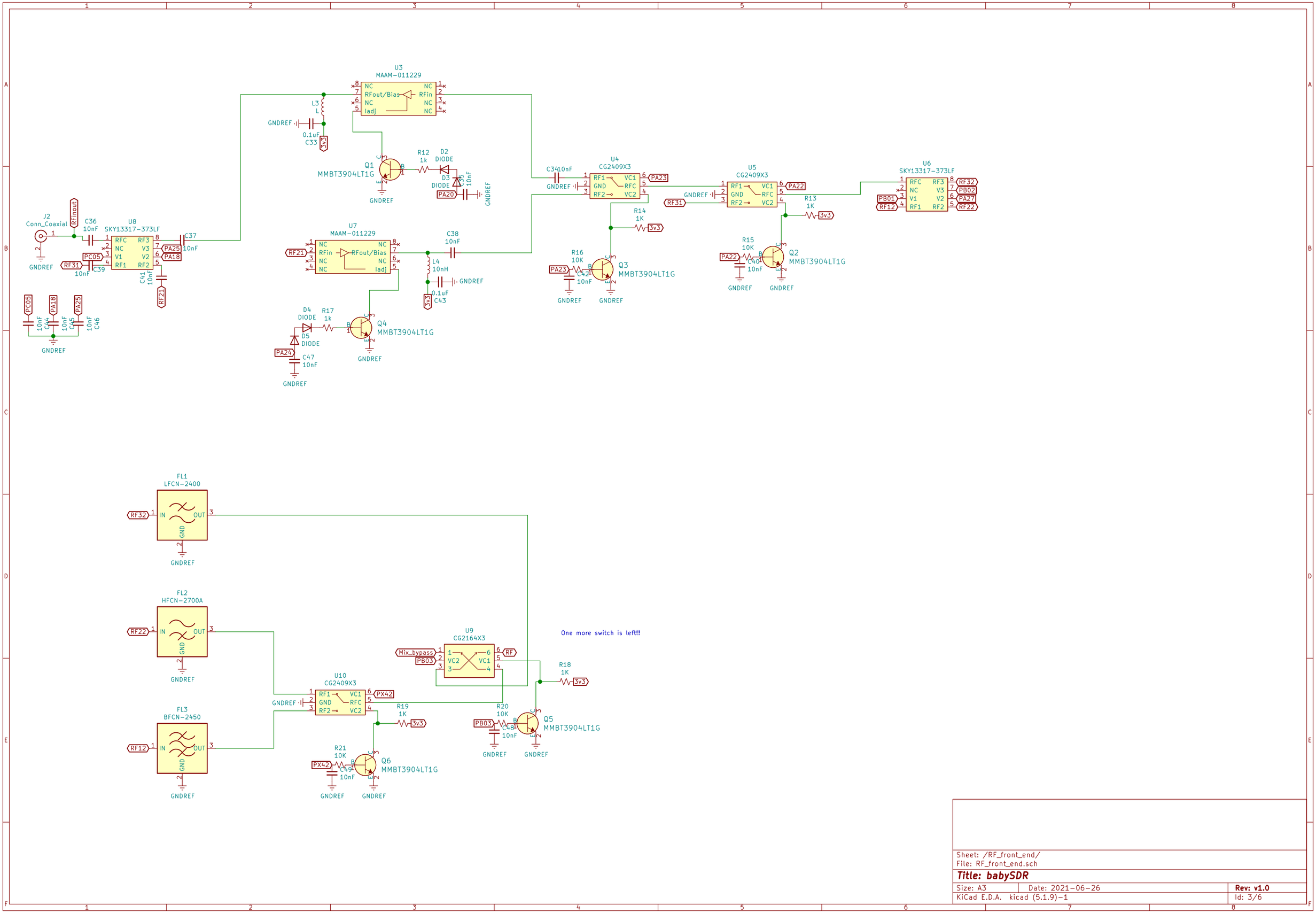

Sheet: /RF_front_end/
File: RF_front_end.sch

Title: babySDR

Size: A3	Date: 2021-06-26	Rev: v1.0
KiCad E.D.A. kicad (5.1.9)-1		Id: 3/6

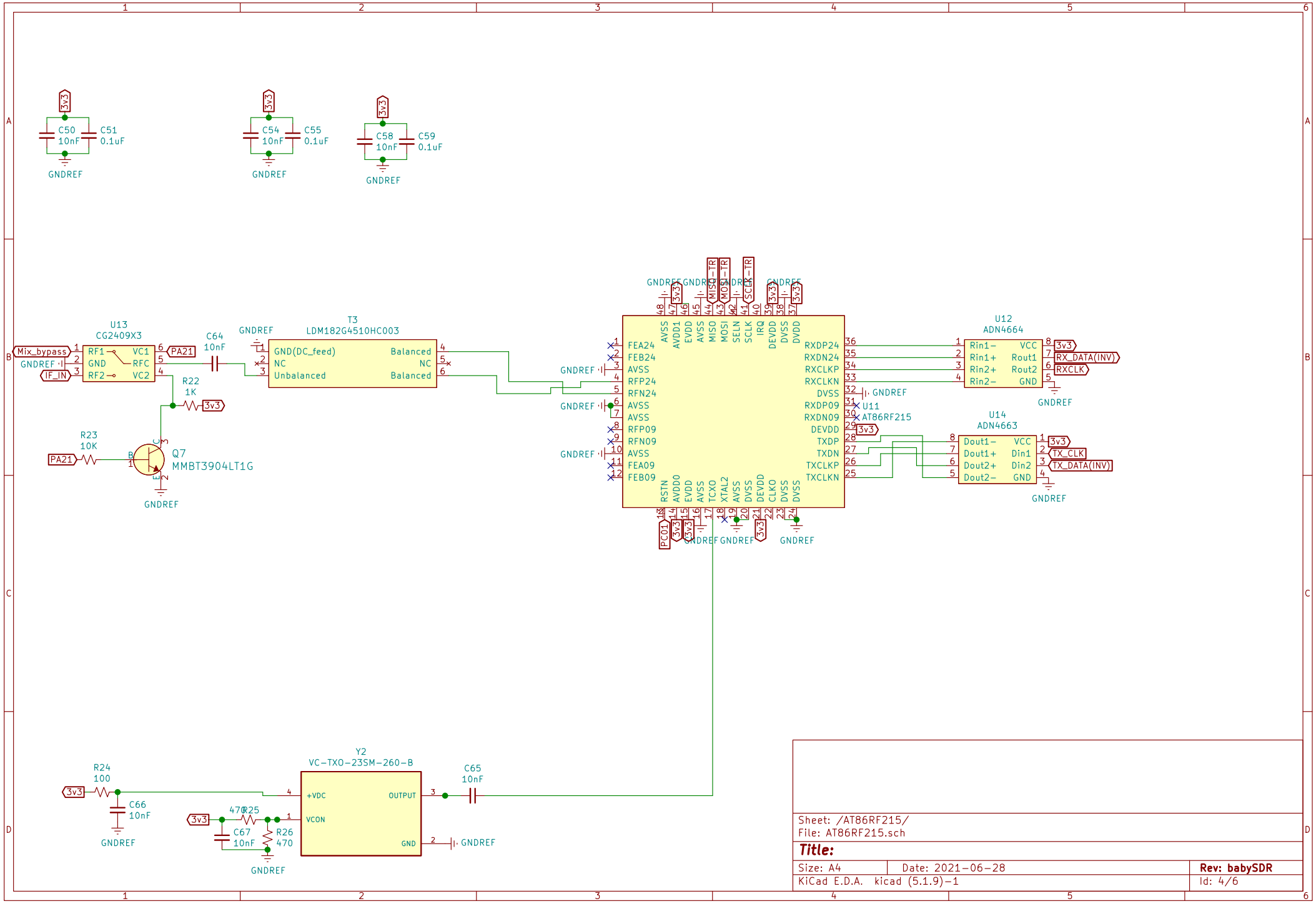

Sheet: /AT86RF215/
File: AT86RF215.sch

Title:

Size: A4	Date: 2021−06−28	**Rev: babySDR**
KiCad E.D.A. kicad (5.1.9)−1		Id: 4/6

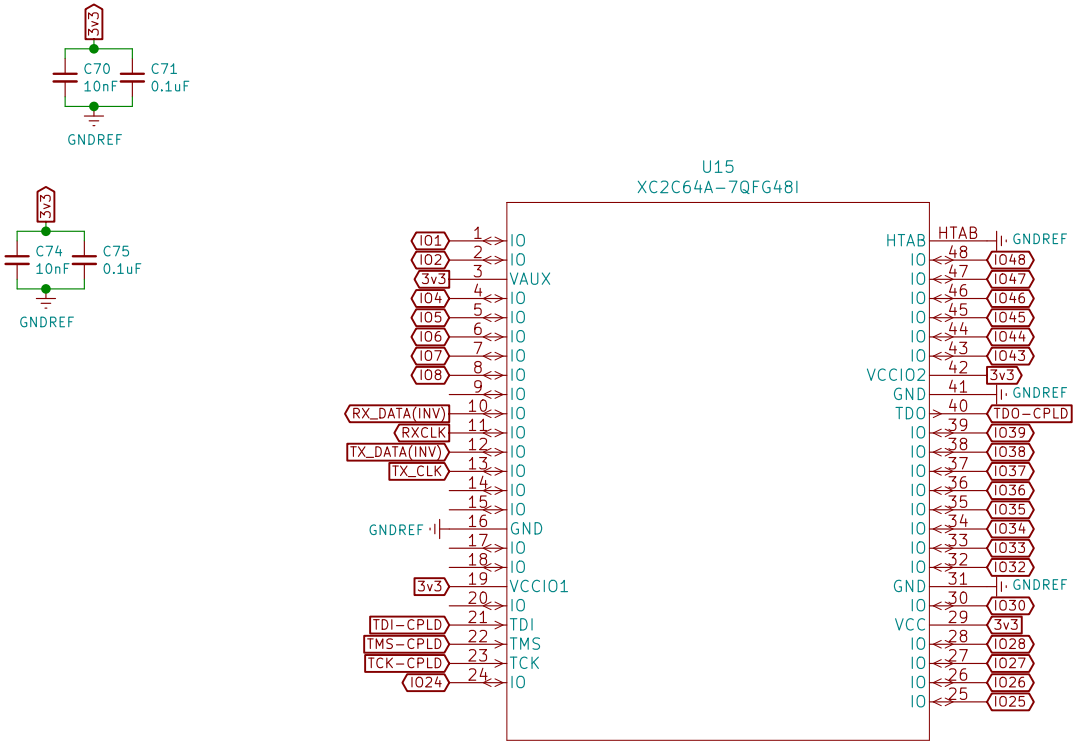

Sheet: /CPLD/
File: CPLD.sch

Title: babySDR

Size: A4	Date: 2021-06-29	**Rev: v1.0**
KiCad E.D.A. kicad (5.1.9)-1		Id: 5/6

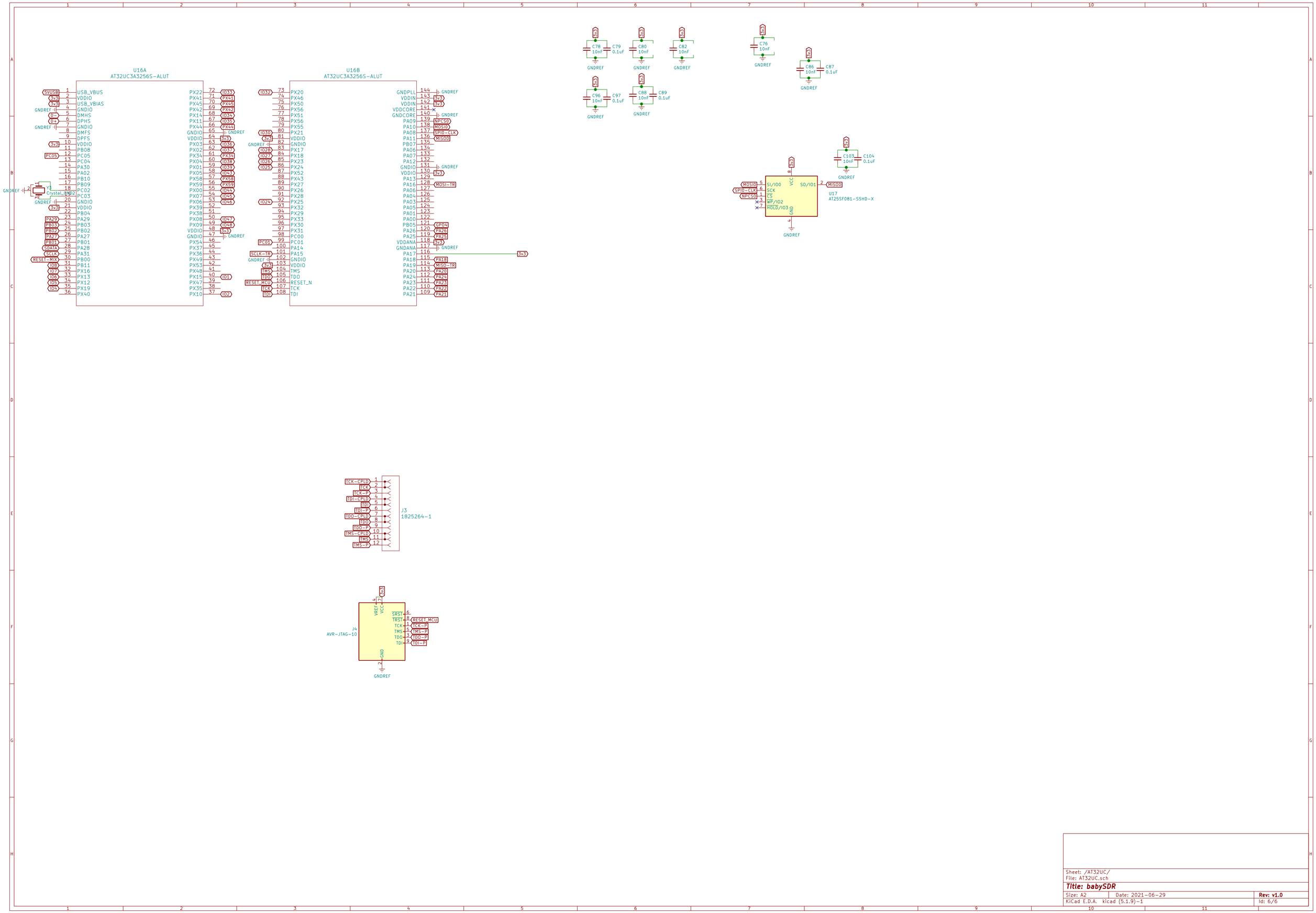

Sheet: /AT32UC/	
File: AT32UC.sch	
Title: babySDR	
Size: A2 | Date: 2021-06-29	**Rev: v1.0**
KiCad E.D.A. kicad (5.1.9)-1	Id: 6/6