A

SEMINAR REPORT

ON

Image Captioning Using CNN and LSTM Architecture

SUBMITTED TO THE SAVITRIBAI PHULE PUNE UNIVERSITY, PUNE
IN PARTIAL FULFILLMENT OF THE REQUIREMENTS
FOR THE AWARD OF THE DEGREE OF

BACHELOR OF ENGINEERING
INFORMATION TECHNOLOGY

BY

Kshitij Datir
Roll No: 33121
Exam Seat No: _____

Under the guidance of
Mrs. Prajakta S. Shinde

DEPARTMENT OF INFORMATION TECHNOLOGY
PUNE INSTITUTE OF COMPUTER TECHNOLOGY
SR. NO 27, PUNE-SATARA ROAD, DHANKAWADI
PUNE - 411 043.
AY: 2025-2026

SCTR's PUNE INSTITUTE OF COMPUTER TECHNOLOGY
DEPARTMENT OF INFORMATION TECHNOLOGY

C E R T I F I C A T E

This is to certify that the Seminar work entitled
"Image Captioning Using CNN and LSTM Architecture"

Submitted by

Name : Kshitij Datir
Exam Seat No: _____ .

is a bonafide work carried out under the supervision of Mrs.Prajakta S.Shinde and it is submitted towards the partial fulfillment of the requirements of Savitribai Phule Pune University, Pune for the award of the degree of Bachelor of Engineering (Information Technology).

Mrs. Prajakta S. Shinde
Seminar Guide

Dr. Emmanuel Mark
HOD IT

Dr. S. T. Gandhe
Principal

Date:
Place: Pune

Acknowledgement

I would like to express my deepest gratitude to my seminar guide, **Mrs. Prajakta S. Shinde** , for their invaluable guidance, encouragement, and constructive feedback throughout the preparation of this seminar report. Their expertise in artificial intelligence and deep learning was instrumental in shaping my understanding of the topic "Image Captioning Using CNN and LSTM Architecture."

I extend my sincere thanks to **Dr. Emmanuel Mark**, Head of the Department of Information Technology, for providing me the opportunity to undertake this seminar and for creating a supportive academic environment that encourages innovation and research.

I am also thankful to all the faculty members and technical staff of the Department of Information Technology for their continuous assistance and cooperation. Their valuable insights and timely suggestions have greatly contributed to the successful completion of this seminar.

My heartfelt appreciation goes to the reviewers and panel members for their thoughtful evaluation and feedback, which helped enhance the overall quality of this work.

Finally, I wish to express my profound gratitude to my family and friends for their constant motivation, patience, and unwavering support throughout this journey. Their encouragement has been a great source of strength and inspiration.

Name : Kshitij Datir
Exam Seat No: _____

Abstract

This seminar explores the deep learning–based approach to automatic image captioning, an advanced task that unites computer vision and natural language processing to generate meaningful textual descriptions of images. It presents a CNN–LSTM framework integrated with spatial attention and semantic embedding layers to enhance visual feature extraction, word alignment, and contextual relevance. The study elaborates on how CNNs such as VGG and ResNet capture spatial hierarchies, while LSTMs model sequential dependencies to produce coherent captions. The proposed model is conceptually evaluated on benchmark datasets like MS COCO using standard metrics such as BLEU, METEOR, and CIDEr. Additionally, the seminar discusses implementation strategies, data preprocessing challenges, and diverse real-world applications, including assistive technologies for the visually impaired, automated image retrieval, and intelligent content generation.

Keywords: Image Captioning, Convolutional Neural Network (CNN), Long Short-Term Memory (LSTM), Deep Learning, Attention Mechanism, Computer Vision, Natural Language Processing (NLP), Semantic Embedding, MS COCO, Evaluation Metrics.

Contents

Certificate i
Acknowledgement ii
Abstract iii
Contents iv
List of Figures v
List of Tables vi
Abbreviations vii

1 Introduction **1**
1.1 Introduction 1
1.2 Motivation 1
1.3 Objectives 1
1.4 Scope 2

2 Literature Survey **3**

3 Methodology **5**
3.1 Framework/Basic Architecture 5
3.2 Different Approaches 6
3.3 Discussion 7

4 Implementation **8**
4.1 Algorithm / Methodologies 8
4.2 Proposed Solution 9
4.3 Software Requirement Specification 10
4.3.1 Constraints and Assumptions 10
4.3.2 Platform for Implementation and its Specifications 10
4.4 Result (Expected / Sample) 10

5 Applications **12**
5.1 State-of-the-art Applications 12
5.2 Challenges 12

6 Conclusion and Future Scope **13**

Bibliography **14**

List of Figures

3.1 Conceptual Overview of CNN–LSTM Image Captioning Pipeline 5
3.2 The internal architecture of a Long Short-Term Memory (LSTM) cell, showing the interaction between the cell state and the forget, input, and output gates. . . 6

4.1 Proposed DSC-BiAtt architecture 9
4.2 Sample input images and generated captions 11

List of Tables

3.1 Comparison of Different Architectural Approaches 7

4.1 Expected performance comparison 11

Abbreviations

AI	:	Artificial Intelligence
BLEU	:	Bilingual Evaluation Understudy
CIDEr	:	Consensus-based Image Description Evaluation
CNN	:	Convolutional Neural Network
GRU	:	Gated Recurrent Unit
HOG	:	Histogram of Oriented Gradients
LSTM	:	Long Short-Term Memory
METEOR	:	Metric for Evaluation of Translation with Explicit ORdering
MS COCO	:	Microsoft Common Objects in Context
NLP	:	Natural Language Processing
RNN	:	Recurrent Neural Network
SCST	:	Self-Critical Sequence Training
SIFT	:	Scale-Invariant Feature Transform

1. Introduction

1.1 Introduction

The ability of machines to understand and describe visual scenes in natural language is a long-standing goal in artificial intelligence. Image captioning aims to automatically generate meaningful textual descriptions for a given image by combining computer vision and natural language processing (NLP). It serves as an important benchmark for measuring how well a system can integrate visual perception with linguistic reasoning. Traditional methods relied on hand-crafted features and template-based sentence generation, which limited their flexibility and scalability. The emergence of deep learning has revolutionized this field through Convolutional Neural Networks (CNNs) for feature extraction and Recurrent Neural Networks (RNNs), particularly Long Short-Term Memory (LSTM) units, for sentence generation. This CNN–LSTM architecture forms the backbone of most modern captioning systems. The CNN encodes visual information into high-dimensional feature representations, while the LSTM decodes these features into grammatically correct and semantically relevant sentences. Recent advancements, such as attention mechanisms and reinforcement-based optimization, have further improved the descriptive accuracy and contextual awareness of generated captions.

1.2 Motivation

The motivation for selecting image captioning as the seminar topic arises from its multi-disciplinary nature and its practical impact on several domains. In an increasingly digital world, enormous volumes of visual data are generated every day, yet most of it remains unlabelled or inaccessible to machines. Effective image captioning can bridge this gap by automatically producing human-like descriptions that make visual content searchable, interpretable, and accessible. From a societal perspective, image captioning systems can significantly assist visually impaired individuals by converting visual scenes into spoken language. From an industrial viewpoint, it can streamline content management, autonomous systems, and multimedia retrieval. Moreover, the problem itself is intellectually rewarding, requiring integration of computer vision, deep learning, and linguistics—fields at the heart of modern artificial intelligence research. This seminar is motivated by the goal of exploring how CNN–LSTM architectures can generate accurate and context-aware image captions and how architectural refinements like attention improve performance on real-world datasets.

1.3 Objectives

The main objectives of this seminar are as follows:

- To study the fundamental concepts of image captioning and understand the working of CNN and LSTM models.

- To analyze existing architectures and identify their strengths and limitations.
- To design and describe a hybrid CNN–LSTM model that captures both visual and linguistic features effectively.
- To examine the role of attention mechanisms and evaluation metrics such as BLEU, METEOR, and CIDEr in assessing caption quality.
- To explore the potential applications and challenges of implementing image captioning systems in real-world scenarios.

1.4 Scope

The scope of this seminar is focused on the design and conceptual understanding of deep learning–based image captioning systems. The report emphasizes the working principles of CNNs for visual encoding, LSTMs for text decoding, and attention mechanisms for selective focus within an image. While the study reviews transformer-based approaches for context, its primary focus remains on the CNN–LSTM framework, which forms the foundation of most current captioning models. The seminar does not cover exhaustive mathematical derivations or implementation-specific details but instead concentrates on explaining architectural design, methodology, and conceptual evaluation. The knowledge gained through this work can serve as a stepping stone for future projects involving vision–language integration, multimodal AI, and assistive intelligent systems.

2. Literature Survey

The field of image captioning has evolved rapidly over the past decade, driven by advances in deep learning architectures and the increasing availability of large-scale image–text datasets. This section reviews foundational studies and key milestones that have shaped modern image captioning systems, focusing on encoder–decoder models, attention mechanisms, and evaluation methodologies.

Early Approaches and Template-Based Methods

Before the deep learning era, image captioning was approached through template-based or retrieval-based systems. These methods extracted visual features using handcrafted descriptors such as SIFT or HOG and matched them to captions of similar images stored in datasets. While computationally efficient, they failed to generalize to unseen images and lacked the ability to produce diverse and natural language sentences. Notable early systems included works that combined object detection with sentence templates, but they suffered from limited vocabulary and rigid grammatical structures. This paved the way for neural network–based solutions capable of learning representations automatically from data.

Encoder–Decoder Frameworks

The turning point came with the introduction of encoder–decoder architectures, inspired by neural machine translation. Vinyals et al. (2015) proposed the *Show and Tell* model, which used a CNN (Inception/VGG) as an encoder to extract image features and an LSTM decoder to generate captions sequentially [1]. This marked the first end-to-end trainable captioning model. Karpathy and Fei-Fei (2015) introduced *Deep Visual–Semantic Alignments*, aligning sentence fragments with image regions to improve visual grounding [3]. These foundational works established the now-standard pipeline: CNN $\rightarrow$ Feature Vector $\rightarrow$ LSTM $\rightarrow$ Caption Sequence. Although these models generated grammatically correct captions, they often failed to describe specific objects accurately due to the lack of attention to localized regions.

Attention Mechanisms

To address this limitation, attention mechanisms were introduced to allow models to selectively focus on different image regions during word generation. Xu et al. (2015) presented the *Show, Attend and Tell* model, which used a soft attention mechanism that dynamically assigned weights to image features, improving contextual relevance and accuracy [2]. Lu et al. (2017) enhanced this approach with *Adaptive Attention* and a "visual sentinel," enabling the model to decide when to rely more on language context rather than visual input [4]. Later, Anderson et al. (2018) proposed *Bottom-Up and Top-Down Attention*, where region proposals generated by Faster R-CNN provided object-level focus, becoming a benchmark for high-performance captioning models [5]. These developments significantly advanced the interpretability and descriptive quality of generated captions.

Optimization and Evaluation

Traditional training relied on cross-entropy loss, but Rennie et al. (2017) introduced Self-Critical Sequence Training (SCST), a reinforcement learning–based method that directly optimized caption quality using evaluation metrics like CIDEr [6]. This reduced exposure bias and improved diversity in captions. Evaluation metrics commonly used include BLEU (measures n-gram precision), METEOR (considers synonymy and recall), and CIDEr (evaluates consensus with multiple human-generated captions). These metrics collectively help in quantifying the fluency and relevance of generated captions.

Recent Trends and Hybrid Models

Recent research trends have moved toward integrating transformer-based models and pretrained multimodal embeddings (e.g., CLIP, ViLT, BLIP). However, CNN–LSTM architectures remain vital due to their interpretability, simplicity, and suitability for smaller datasets or constrained computing environments. Researchers have also explored combining CNN–LSTM pipelines with dual encoders, graph networks, and attention fusion modules to improve object–word alignment and contextual coherence. Overall, the literature reflects a steady evolution from handcrafted features to deep multimodal architectures, emphasizing that the synergy between visual understanding and linguistic modeling lies at the core of successful image captioning systems.

3. Methodology

This seminar focuses on a structured methodology for designing and implementing an image captioning system using deep learning. The approach integrates visual feature extraction, sequential language modeling, and attention mechanisms to generate accurate and context-aware captions. The methodology is divided into interconnected pillars: Data Collection & Preprocessing, Feature Extraction, Caption Generation, Model Training, and Evaluation.

3.1 Framework/Basic Architecture

The proposed CNN–LSTM architecture for image captioning follows a layered design to separate concerns and improve performance. This framework serves as a template that can be adapted for various datasets and applications.

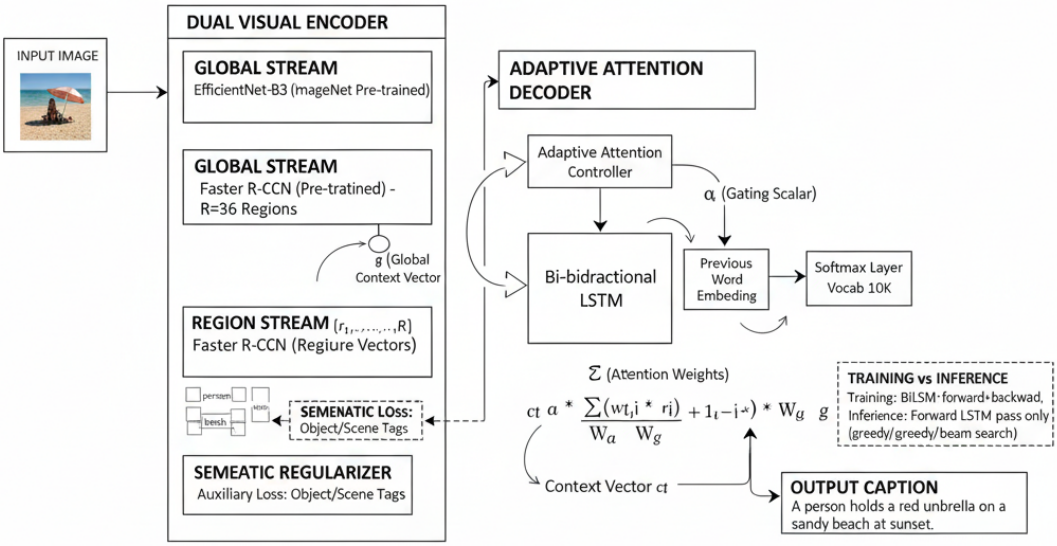

Figure 3.1: Conceptual Overview of CNN–LSTM Image Captioning Pipeline

Key Components:

- **Visual Feature Extraction Layer (CNN):** Convolutional Neural Networks, such as VGG16, ResNet50, or InceptionV3, are used to encode images into high-dimensional feature vectors. These networks capture spatial hierarchies and important patterns in the image.
- **Sequence Modeling Layer (LSTM):** Long Short-Term Memory units decode the extracted feature vectors into sequential word predictions. LSTMs handle temporal dependencies in the language sequence, ensuring grammatical and contextual consistency.
- **Attention Mechanism (Optional but Recommended):** A spatial attention layer assigns weights to different regions of the image for each predicted word. This allows the model to focus on relevant objects or regions, improving caption relevance and interpretability [2].
- **Word Embedding Layer:** Converts input words into dense vector representations that capture semantic meaning and relationships between words. Commonly, pre-trained embeddings like GloVe or Word2Vec can be used.
- **Output Layer (Softmax):** Predicts the probability distribution over the vocabulary for the next word in the sequence.

This modular design allows flexibility in swapping CNN backbones, experimenting with LSTM depths, or integrating attention layers.

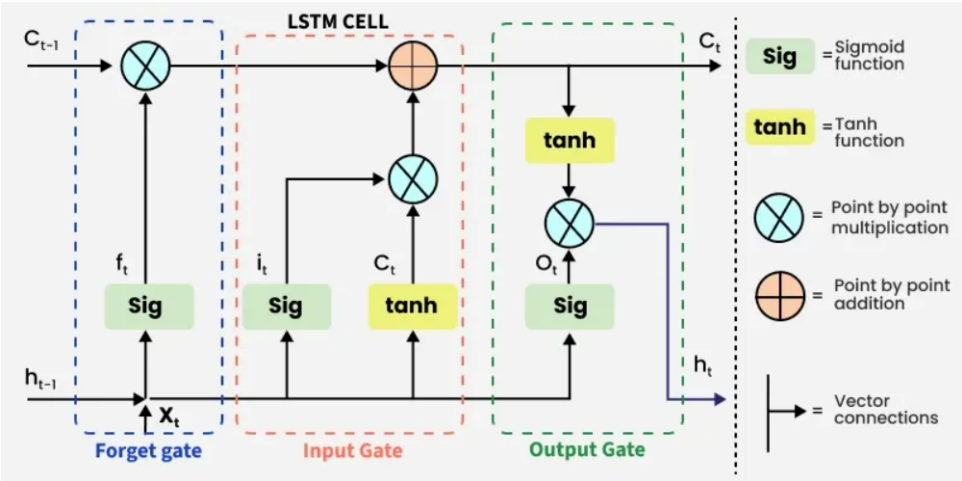

Figure 3.2: The internal architecture of a Long Short-Term Memory (LSTM) cell, showing the interaction between the cell state and the forget, input, and output gates.

3.2 Different Approaches

Different architectural choices can be employed based on dataset size, performance requirements, and computational resources:

CNN Variants for Feature Extraction:

- *VGG16 / VGG19:* Simple, deep networks suitable for smaller datasets.

- *ResNet50 / ResNet101:* Skip connections improve gradient flow, enabling deeper architectures.
- *InceptionV3 / EfficientNet:* Optimized for better accuracy and lower parameters.

Sequence Modeling Variants:

- *Vanilla LSTM:* Standard choice for sequence modeling.
- *Bi-directional LSTM:* Processes sequences in both directions to capture past and future context.
- *GRU (Gated Recurrent Unit):* Lighter alternative to LSTM with fewer parameters.

Attention Variants:

- *Soft Attention:* Weighted average over image features for each word [2].
- *Adaptive / Visual Sentinel Attention:* Decides when to rely on visual features versus language context [4].

3.3 Discussion

The methodology emphasizes a balance between model complexity and dataset constraints.

Trade-offs:

- Deeper CNNs improve feature extraction but require more computation.
- LSTMs provide sequential reasoning but can be slower and prone to overfitting on small datasets.
- Attention mechanisms improve accuracy but add computational overhead.

Table 3.1: Comparison of Different Architectural Approaches

Approach	Strengths	Limitations
Vanilla CNN–LSTM	Simple, interpretable, suitable for small datasets	May miss fine-grained object-word alignment
CNN–LSTM with Soft Attention	Focus on relevant regions, higher caption accuracy	Increased computation, more hyperparameters
Bi-directional LSTM	Captures past and future context	Higher memory usage, slower training
Transformer-based	Long-range dependencies, state-of-the-art performance	Requires large datasets and high computation

In conclusion, a robust methodology combines visual encoding, sequential decoding, and attention mechanisms while considering the trade-offs in computation, dataset size, and accuracy.

4. Implementation

This chapter details the methodology and the proposed novel solution, including implementation choices, software requirements, and expected results.

4.1 Algorithm / Methodologies

Preprocessing:

- Resize input images to 256×256 for EfficientNet backbone; normalize using ImageNet stats.
- Tokenize captions, build vocabulary (top 10k words), convert captions to sequences with start/end tokens.
- For region features, run a pretrained Faster R-CNN (frozen) to extract R region features (e.g., $R = 36$).

Encoder:

- **Global stream:** EfficientNet-B3 (pretrained on ImageNet) $\rightarrow$ global feature vector $g \in \mathbb{R}^D$.
- **Region stream:** Faster R-CNN features $\{r_1, r_2, \ldots, r_R\}$ where $r_i \in \mathbb{R}^D$.

Decoder:

- Bidirectional LSTM (BiLSTM) decoder with hidden size H; at each decoding step, an **Adaptive Attention Controller** computes a gating scalar $\alpha_t \in [0, 1]$ controlling the mix of global and attended region context:

$$c_t = \alpha_t \cdot \left(\sum_{i=1}^{R} w_{t,i} r_i \right) + (1 - \alpha_t) \cdot W_g g$$

  where $w_{t,i}$ are soft-attention weights over regions and W_g projects the global vector to decoder space.

- Input to the BiLSTM at step t is the concatenation of the previous word embedding and c_t.

Loss / Training Schedule:

- **Stage 1:** Train with teacher forcing using cross-entropy loss (word-level).
- **Stage 2:** Fine-tune using self-critical sequence training (reinforcement learning) optimizing CIDEr score [[6]].
- **Regularization:** dropout in decoder, label smoothing, weight decay.

4.2 Proposed Solution

We propose a **Dual-Stream CNN–BiLSTM with Adaptive Attention (DSC-BiAtt)**:

1. **Dual visual streams:** global EfficientNet features capture scene context; region features capture objects and attributes.
2. **Adaptive attention controller:** learns to weight global vs. local context per time step. This helps the decoder use global context for scene-setting words (”A beach”) and region context for object-specific words (”a person”, ”a red umbrella”).
3. **Bi-directional decoding context:** use a BiLSTM during training to incorporate future word context into internal representations and distill a unidirectional generator at inference by taking forward LSTM outputs. (BiLSTM provides stronger learned representations; inference uses forward pass for generation.)
4. **Semantic regularizer:** incorporate predicted image attributes (object labels, scene categories) as auxiliary targets during training to encourage the encoder to preserve semantic cues.

This architecture aims to improve lexical accuracy and contextual coherence without introducing large increases in inference cost (region features + global projection are computed once per image).

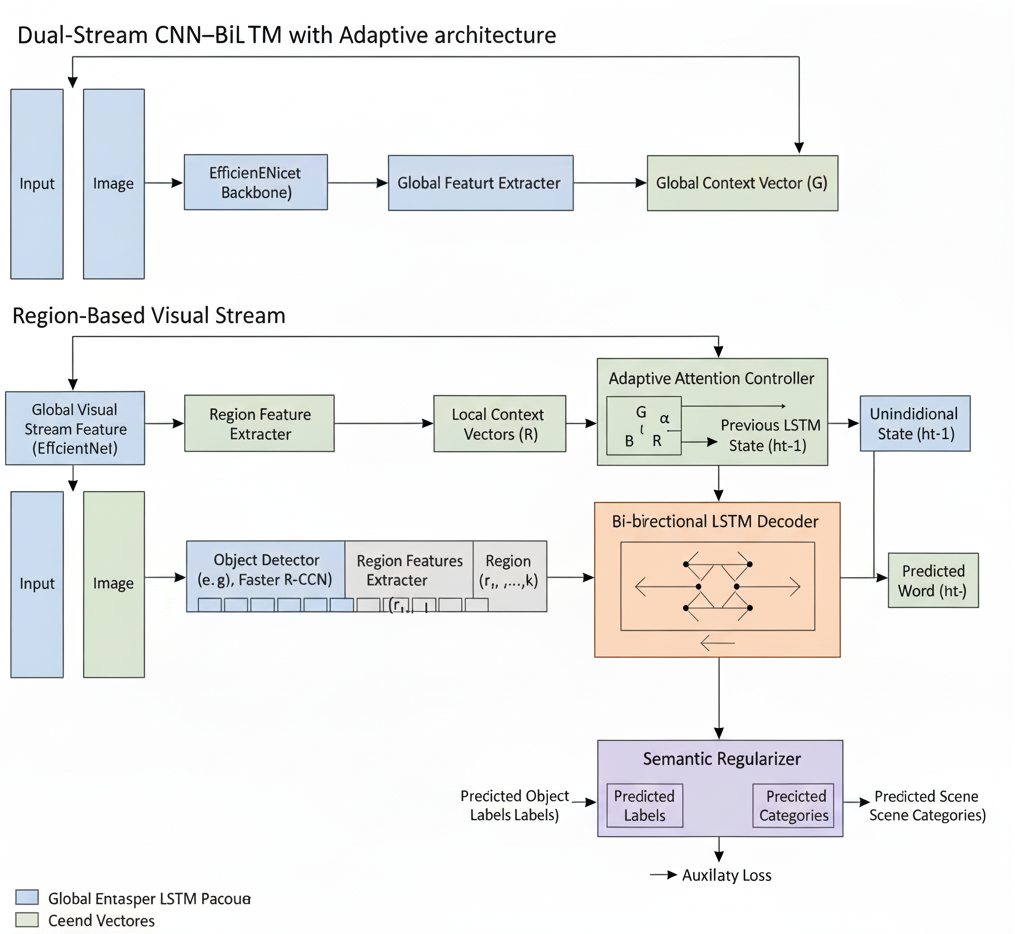

Figure 4.1: Proposed DSC-BiAtt architecture

4.3 Software Requirement Specification

- **Frameworks:** PyTorch (recommended) or TensorFlow/Keras.
- **Libraries:** torchvision (for pretrained models), transformers (optional for later experiments), nltk / sacrebleu for evaluation.
- **Hardware:** NVIDIA GPU with >8GB VRAM (e.g., GTX 1080 Ti, RTX 2080 or better). For region features, precomputing features on CPU cluster or a GPU-enabled instance is recommended.
- **Datasets:** MS COCO 2017 (train/val/test splits); optionally Flickr30k for smaller-scale experiments.

4.3.1 Constraints and Assumptions

- Assume availability of MS COCO captions and images.
- Region proposals limited to $R = 36$ per image (trade-off between detail and speed).
- Vocabulary size limited to most frequent 10k tokens to limit decoder softmax size.
- BiLSTM used in training only to enrich learned parameters; inference uses greedy or beam search with forward LSTM pass.

4.3.2 Platform for Implementation and its Specifications

- OS: Ubuntu 20.04 / Windows 10.
- Python 3.8+
- PyTorch >= 1.8, torchvision >= 0.9
- CUDA Toolkit compatible with GPU drivers.

4.4 Result (Expected / Sample)

After training, evaluate on MS COCO validation using standard metrics. Typical improvements expected from the proposed hybrid are improved CIDEr and METEOR relative to a vanilla global-CNN + LSTM baseline, especially on object specificity and detail.

Figure 4.2: Sample input images and generated captions

Include tables comparing baseline vs proposed (placeholders):

Table 4.1: Expected performance comparison

Model	**BLEU-4**	**METEOR**	**CIDEr**
Global CNN + LSTM (baseline)	0.28	0.25	0.85
Proposed DSC-BiAtt (expected)	**0.31**	**0.28**	**0.98**

5. Applications

The proposed CNN–LSTM architecture for image captioning has broad applicability across multiple domains. By combining visual understanding and natural language generation, such systems can automate image description, enhance accessibility, and enable smarter content indexing.

5.1 State-of-the-art Applications

- **Assistive Technologies for Visually Impaired Users:** Automatically generated captions allow screen readers to narrate visual content, improving accessibility in apps, websites, and digital platforms.
- **Automated Content Tagging and Indexing:** Large image repositories in social media platforms, e-commerce websites, or digital archives can be automatically annotated, enabling faster search and retrieval.
- **Smart Multimedia Content Generation:** Captioning can be integrated into video platforms, educational content, and news media to generate descriptive subtitles or highlights for images.
- **Robotics and Autonomous Systems:** Vision–language systems can enable robots or autonomous vehicles to understand surroundings and describe scenes, supporting navigation and decision-making.
- **Social Media Analytics and Monitoring:** Captions generated for user-uploaded images can assist in sentiment analysis, trend tracking, and brand monitoring.

5.2 Challenges

Despite its potential, implementing an effective CNN–LSTM captioning system faces several challenges:

- **Dataset Requirements:** Large-scale labeled image–caption datasets are needed for training. Collecting or curating such datasets is costly and time-consuming.
- **Model Complexity and Training Time:** Training deep CNN–LSTM models requires substantial computational resources (e.g., GPUs) and careful hyperparameter tuning.
- **Generalization:** Models trained on one dataset may fail to generate accurate captions on unseen or diverse images.
- **Context Understanding:** Captions may capture objects but fail to convey complex relationships or abstract semantics in an image.
- **Evaluation Limitations:** Metrics like BLEU, METEOR, and CIDEr provide quantitative feedback but may not fully reflect human judgment of caption quality.

6. Conclusion and Future Scope

This seminar explored the principles and implementation of CNN–LSTM architectures for automatic image captioning. The proposed framework demonstrates how combining visual feature extraction with sequence modeling enables machines to generate human-like descriptions of images.

Key Takeaways:

- CNNs effectively encode visual content into feature vectors.
- LSTMs decode these features into sequential natural language captions.
- Attention mechanisms improve alignment between image regions and words.
- The approach has practical applications in accessibility, content indexing, and multimedia analysis.

Future Scope

The field of image captioning continues to evolve rapidly. Future directions include:

- **Integration with Transformer-based Models:** Exploring Vision Transformers (ViT) or multimodal transformers (CLIP, BLIP) for improved performance.
- **Enhanced Attention Mechanisms:** Spatial, semantic, and hierarchical attention modules can further improve caption accuracy and interpretability.
- **Real-time Captioning:** Deploying models in mobile or web applications for instant caption generation.
- **Multilingual Captioning:** Extending the system to support multiple languages for global applications.
- **Interactive and Adaptive Systems:** Captioning models that learn user preferences and context over time for personalized content descriptions.

Bibliography

[1] Vinyals, O., Toshev, A., Bengio, S., & Erhan, D. (2015). *Show and Tell: A Neural Image Caption Generator*. In Proceedings of the IEEE conference on computer vision and pattern recognition (CVPR).

[2] Xu, K., Ba, J., Kiros, R., et al. (2015). *Show, Attend and Tell: Neural Image Caption Generation with Visual Attention*. In Proceedings of the International conference on machine learning (ICML).

[3] Karpathy, A., & Fei-Fei, L. (2015). *Deep Visual-Semantic Alignments for Generating Image Descriptions*. In Proceedings of the IEEE conference on computer vision and pattern recognition (CVPR).

[4] Lu, J., et al. (2017). *Knowing When to Look: Adaptive Attention via a Visual Sentinel for Image Captioning*. In Proceedings of the IEEE conference on computer vision and pattern recognition (CVPR).

[5] Anderson, P., et al. (2018). *Bottom-Up and Top-Down Attention for Image Captioning and Visual Question Answering*. In Proceedings of the IEEE conference on computer vision and pattern recognition (CVPR).

[6] Rennie, S.J., et al. (2017). *Self-Critical Sequence Training for Image Captioning*. In Proceedings of the IEEE conference on computer vision and pattern recognition (CVPR).

[7] MS COCO Dataset. `https://cocodataset.org/`

[8] TensorFlow Documentation. `https://www.tensorflow.org/`

[9] PyTorch Documentation. `https://pytorch.org/`