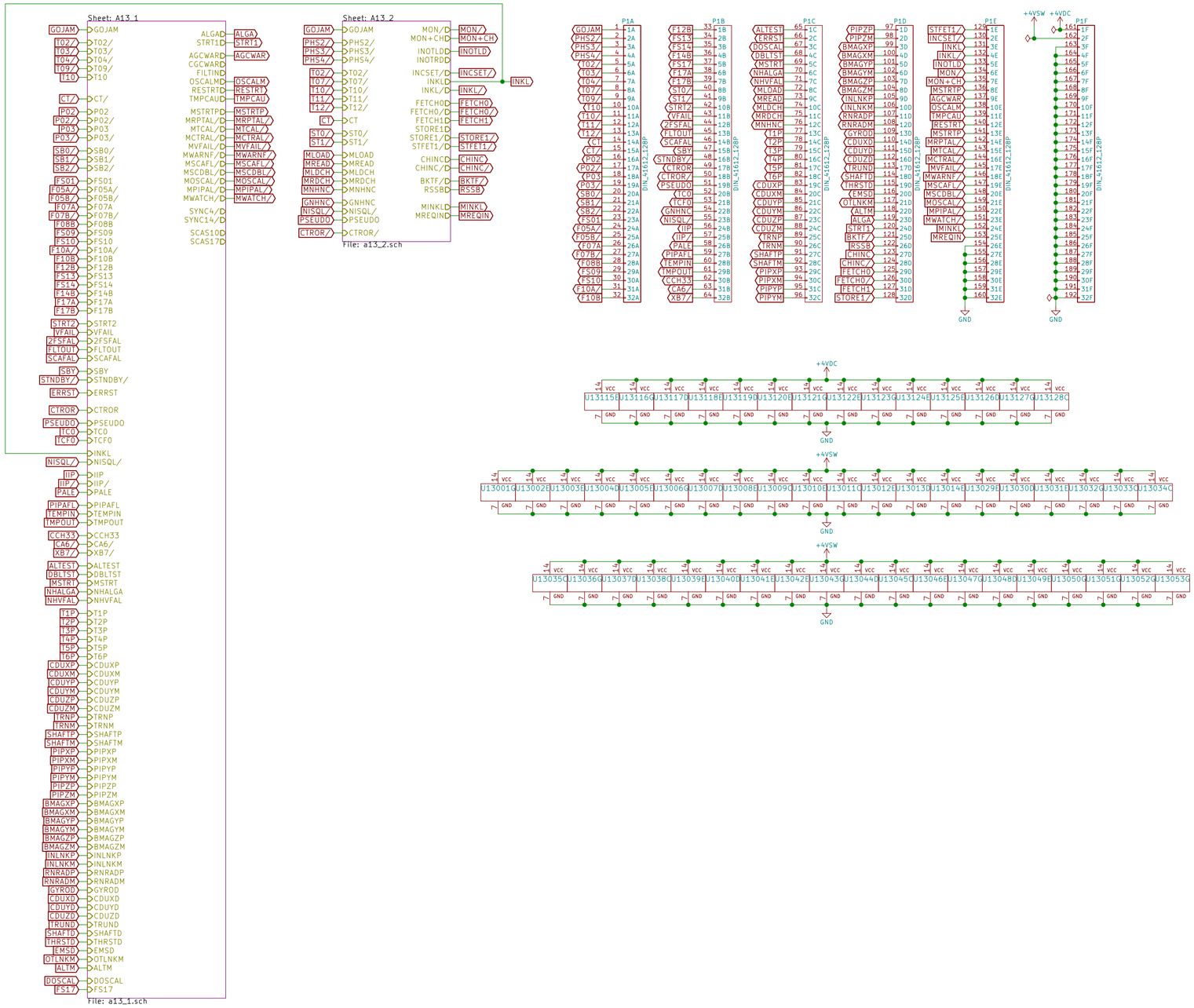

A13	
Sheet: /	
File: alarms.sch	
Title:	
Size: A2	Date:
KiCad E.D.A. kicad (5.1.12)-1	Rev: Id: 1/3

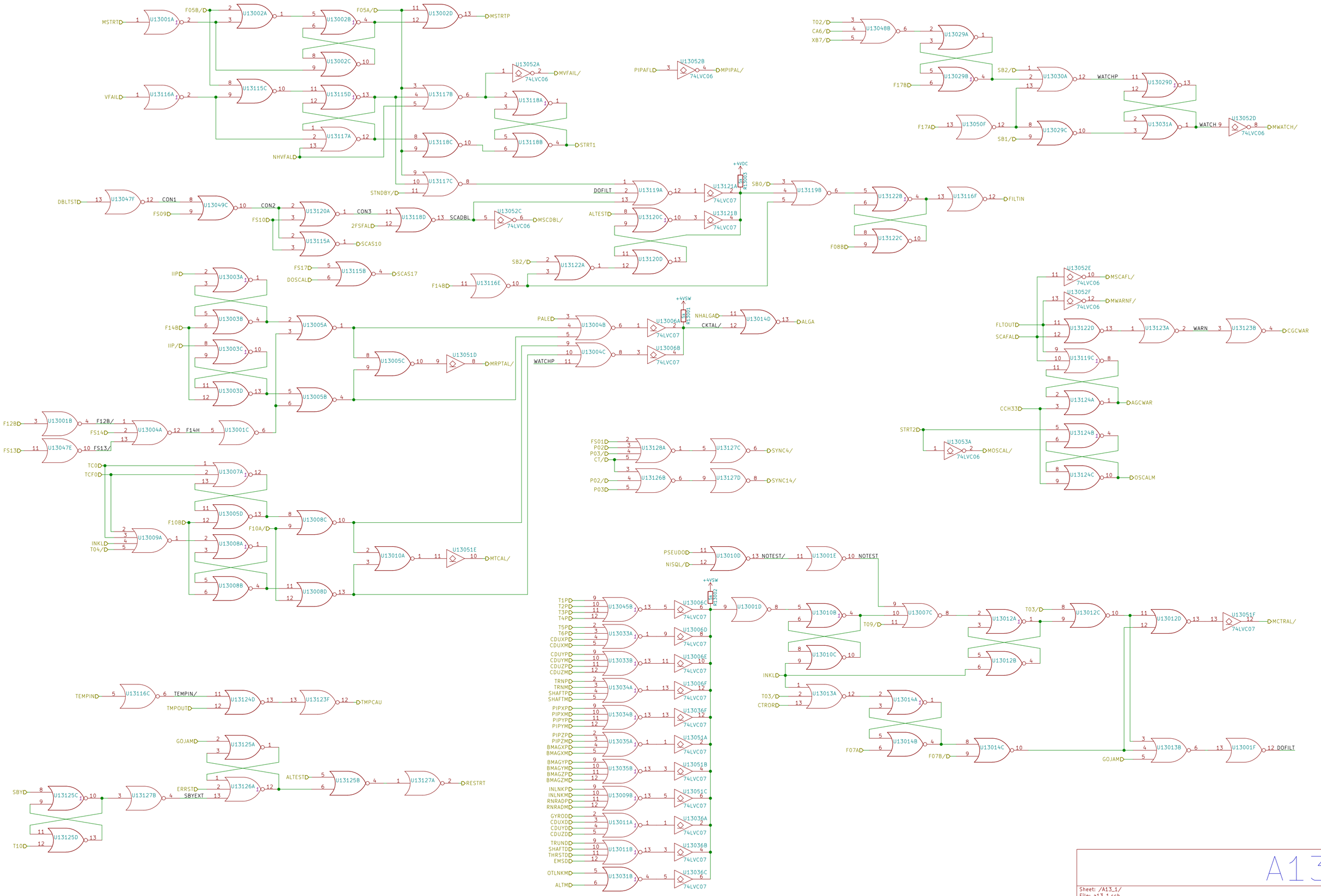
MSTRT
U13001A
F05B/
U13002A
U13002B
F05A/
U13002D
MSTRTP
U13002C
VFAIL
U13116A
U13115C
U13115D
U13117B
U13052A
74LVC06
MVFAIL/
U13118A
U13117A
NHVFAL
U13118C
U13118B
STRT1
U13117C
STNDBY/
PIPAFL
U13052B
MPIPAL/
T02/
CA6/
XB7/
U13048B
U13029A
U13029B
F17B
SB2/
U13030A
WATCHP
U13029D
U13031A
WATCH
U13052D
MWATCH/
F17A
U13050F
SB1/
U13029C
DBLTST
U13047F
CON1
U13049C
FS09
CON2
FS10
U13120A
CON3
U13118D
2FSFAL
SCADBL
U13052C
MSCDBL/
U13115A
SCAS10
DOFILT
U13119A
U13121A
74LVC07
R13003
+4VDC
SB0/
U13119B
U13122B
U13116F
FILTIN
ALTEST
U13120C
U13121B
U13122C
F08B
U13120D
FS17
U13115B
SCAS17
DOSCAL
SB2/
U13122A
F14B
U13116E
IIP
U13003A
U13003B
IIP/
U13003C
U13003D
U13005A
U13005B
U13005C
U13051D
MRPTAL/
PALE
U13004B
U13004C
WATCHP
U13006A
U13006B
R13002
+4VSW
NHALGA
CKTAL/
U13014D
ALGA
U13052E
MSCAFL/
U13052F
MWARNF/
FLTOUT
SCAFAL
U13122D
U13123A
WARN
U13123B
CGCWAR
U13119C
CCH33
U13124A
AGCWAR
STRT2
U13053A
MOSCAL/
U13124B
U13124C
OSCALM
F12B
U13001B
F12B/
FS14
U13004A
F14H
U13001C
FS13
U13047E
FS13/
TC0
TCF0
U13007A
U13005D
F10B
U13008C
F10A/
U13009A
INKL
T04/
U13008A
U13008B
U13008D
U13010A
U13051E
MTCAL/
FS01
P02
P03/
C1/
U13128A
U13127C
SYNC4/
U13126B
U13127D
SYNC14/
PSEUDO
NISQL/
U13010D
NOTEST/
U13001E
NOTEST
U13001D
U13010B
U13007C
U13012A
T03/
U13012C
U13012D
U13051F
MCTRAL/
T09/
U13010C
U13012B
INKL
U13013A
T03/
CTROR
U13014A
U13014B
F07A
F07B/
U13014C
GOJAM
U13013B
U13001F
DOFILT
T1P
T2P
T5P
T4P
U13045B
U13006C
T5P
T6P
CDUXP
CDUXM
U13033A
U13006D
CDUYP
CDUYM
CDUZP
CDUZM
U13033B
U13006E
TRNP
TRNM
SHAFTP
SHAFTM
U13034A
U13006F
PIPXP
PIPXM
PIPYP
PIPYM
U13034B
U13036F
PIPZP
PIPZM
BMAGXP
BMAGXM
U13035A
U13051A
BMAGYP
BMAGYM
BMAGZP
BMAGZM
U13035B
U13051B
INLNKP
INLNKM
RNRADP
RNRADM
U13009B
U13051C
GYROD
CDUXD
CDUYD
CDUZD
U13011A
U13036A
TRUND
SHAFTD
THRSTD
EMSD
U13011B
U13036B
OTLNKM
ALTM
U13031B
U13036C
TEMPIN
U13116C
TEMPIN/
TMPOUT
U13124D
U13123F
TMPCAU
GOJAM
U13125A
ALTEST
U13125B
U13127A
RESTRT
SBY
U13125C
U13127B
ERRST
SBYEXT
U13126A
T10
U13125D
A13
Sheet: /A13_1/
File: a13_1.sch
Title:
Size: A2
Date:
Rev:
KiCad E.D.A. kicad (5.1.12)-1
Id: 2/3

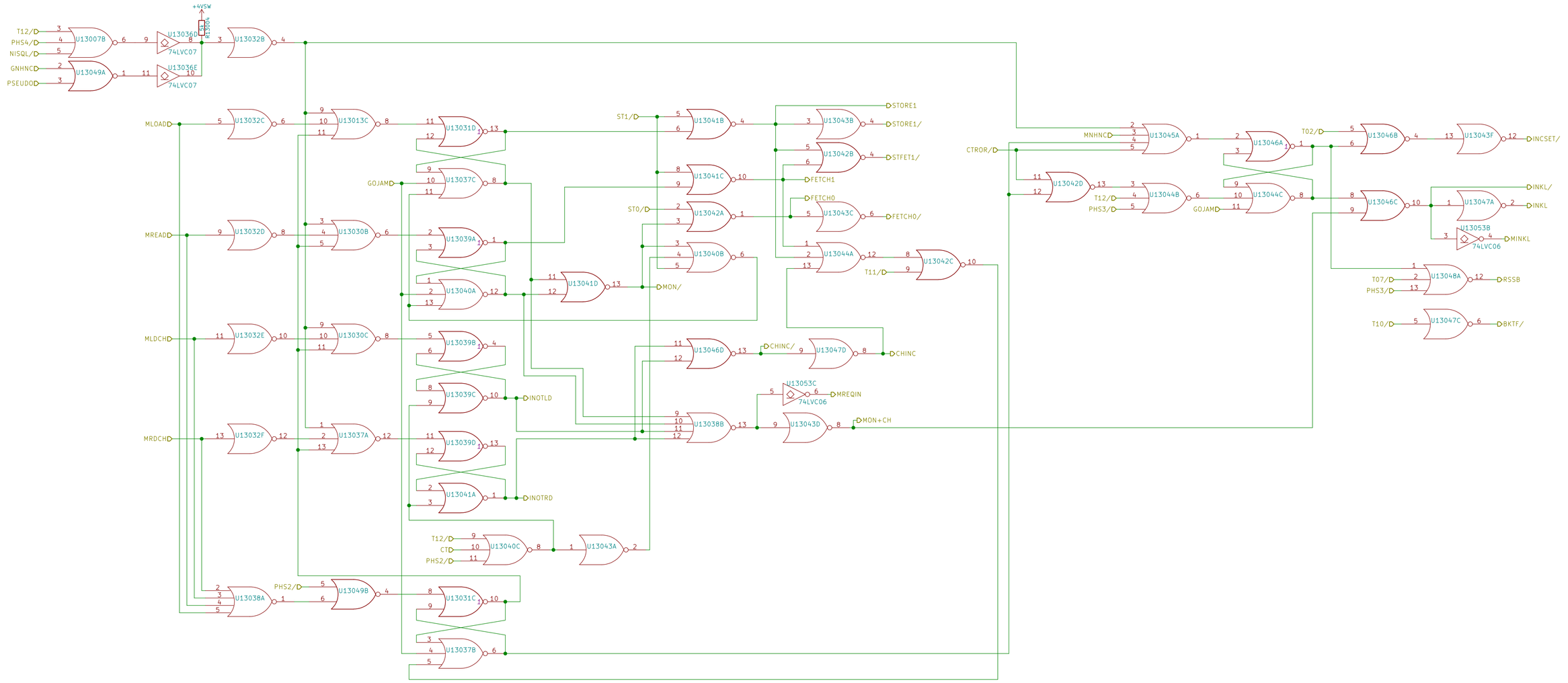

A13

Sheet: /A13_2/
File: a13_2.sch

Title:

Size: A2	Date:	Rev:
KiCad E.D.A. kicad (5.1.12)-1		Id: 3/3