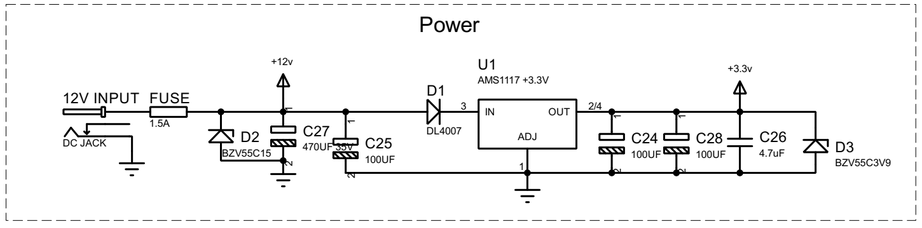
Power
12V INPUT
FUSE
1.5A
DC JACK
D2
BZV55C15
+12v
C27
470UF 35V
C25
100UF
D1
DL4007
U1
AMS1117 +3.3V
IN
OUT
ADJ
C24
100UF
C28
100UF
C26
4.7uF
+3.3v
D3
BZV55C3V9

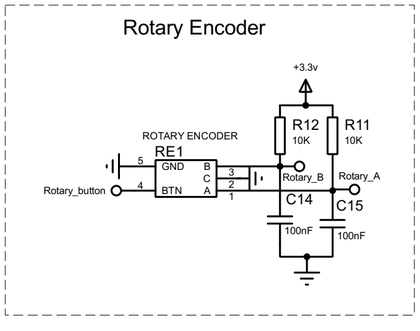
Rotary Encoder
+3.3v
ROTARY ENCODER
RE1
GND
BTN
B
C
A
Rotary_button
R12
10K
R11
10K
Rotary_B
Rotary_A
C14
100nF
C15
100nF

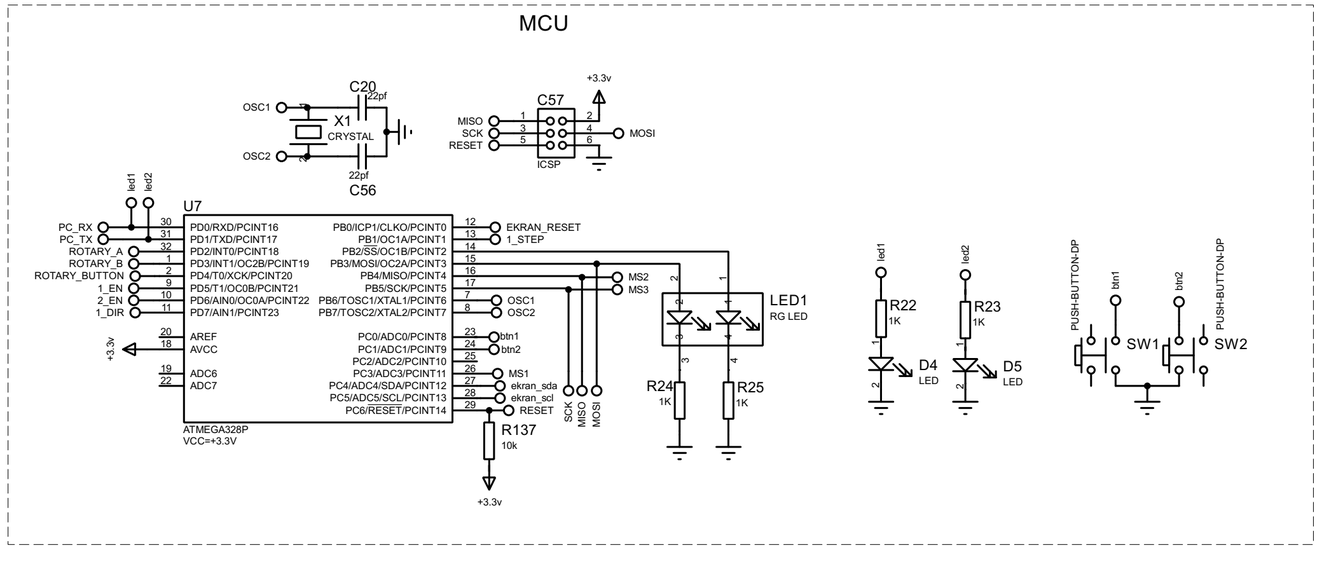
MCU
OSC1
OSC2
X1
CRYSTAL
C20
22pf
C56
22pf
+3.3v
C57
MISO
SCK
RESET
MOSI
ICSP
U7
PC_RX
PC_TX
ROTARY_A
ROTARY_B
ROTARY_BUTTON
1_EN
2_EN
1_DIR
led1
led2
PD0/RXD/PCINT16
PD1/TXD/PCINT17
PD2/INT0/PCINT18
PD3/INT1/OC2B/PCINT19
PD4/T0/XCK/PCINT20
PD5/T1/OC0B/PCINT21
PD6/AIN0/OC0A/PCINT22
PD7/AIN1/PCINT23
AREF
AVCC
ADC6
ADC7
PB0/ICP1/CLKO/PCINT0
PB1/OC1A/PCINT1
PB2/SS/OC1B/PCINT2
PB3/MOSI/OC2A/PCINT3
PB4/MISO/PCINT4
PB5/SCK/PCINT5
PB6/TOSC1/XTAL1/PCINT6
PB7/TOSC2/XTAL2/PCINT7
PC0/ADC0/PCINT8
PC1/ADC1/PCINT9
PC2/ADC2/PCINT10
PC3/ADC3/PCINT11
PC4/ADC4/SDA/PCINT12
PC5/ADC5/SCL/PCINT13
PC6/RESET/PCINT14
EKRAN_RESET
1_STEP
OSC1
OSC2
MS2
MS3
btn1
btn2
MS1
ekran_sda
ekran_scl
RESET
ATMEGA328P
VCC=+3.3V
R137
10k
SCK
MISO
MOSI
LED1
RG LED
R24
1K
R25
1K
R22
1K
R23
1K
D4
LED
D5
LED
PUSH-BUTTON-DP
SW1
SW2

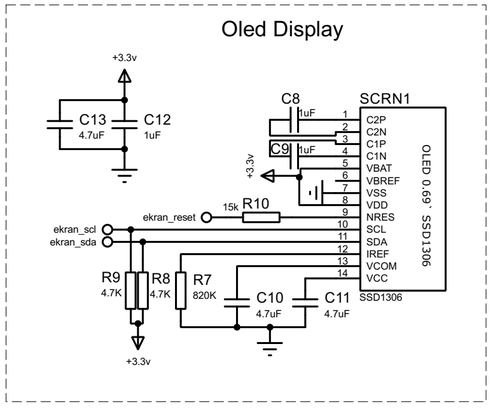
Oled Display
+3.3v
C13
4.7uF
C12
1uF
C8
1uF
C9
1uF
SCRN1
C2P
C2N
C1P
C1N
VBAT
VBREF
VSS
VDD
NRES
SCL
SDA
IREF
VCOM
VCC
OLED 0.69 SSD1306
SSD1306
ekran_reset
R10
15k
ekran_scl
ekran_sda
R9
4.7K
R8
4.7K
R7
820K
C10
4.7uF
C11
4.7uF

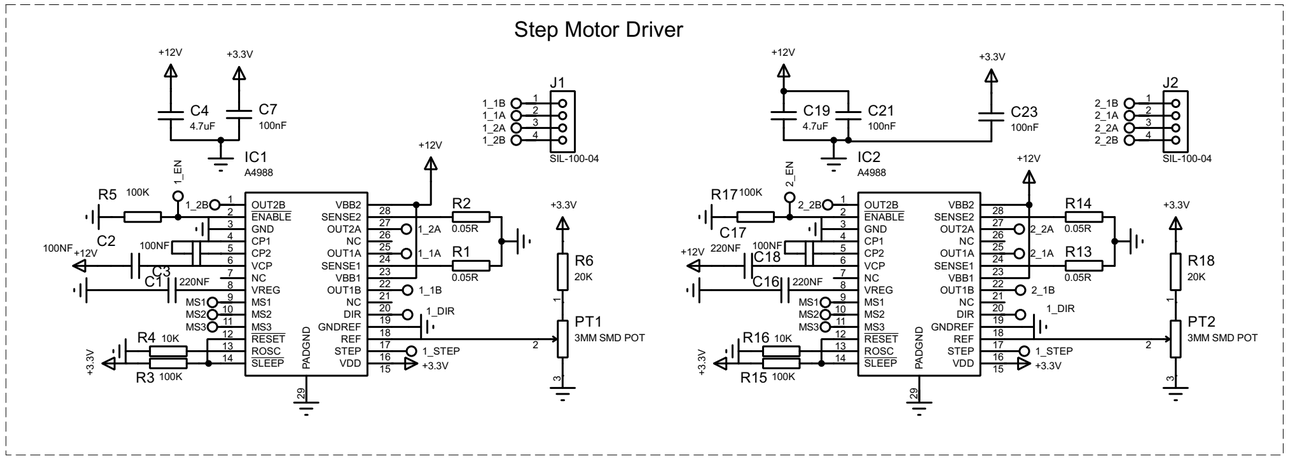
Step Motor Driver
+12V
+3.3V
C4
4.7uF
C7
100nF
IC1
A4988
J1
1_1B
1_1A
1_2A
1_2B
SIL-100-04
R5
100K
1_EN
C2
100NF
C3
100NF
C1
220NF
R4
10K
R3
100K
OUT2B
ENABLE
GND
CP1
CP2
VCP
NC
VREG
MS1
MS2
MS3
RESET
ROSC
SLEEP
PADGND
VBB2
SENSE2
OUT2A
NC
OUT1A
SENSE1
VBB1
OUT1B
NC
DIR
GNDREF
REF
STEP
VDD
R2
0.05R
R1
0.05R
R6
20K
PT1
3MM SMD POT
C19
4.7uF
C21
100nF
C23
100nF
IC2
A4988
J2
2_1B
2_1A
2_2A
2_2B
2_EN
R17
100K
C17
220NF
C18
100NF
C16
220NF
R16
10K
R15
100K
R14
0.05R
R13
0.05R
R18
20K
PT2
3MM SMD POT