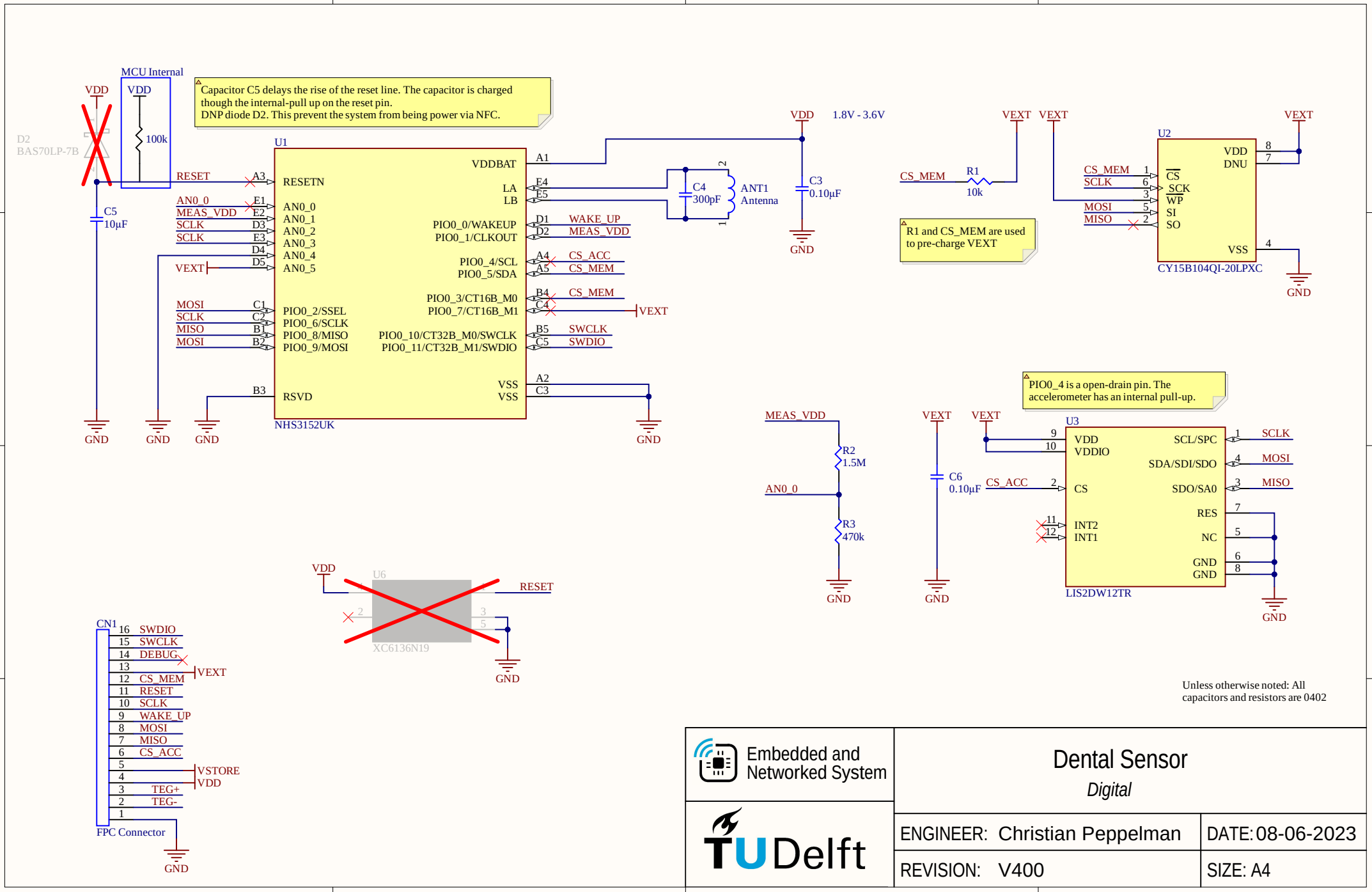
MCU Internal
VDD
100k
D2
BAS70LP-7B
C5
10µF
Capacitor C5 delays the rise of the reset line. The capacitor is charged though the internal-pull up on the reset pin.
DNP diode D2. This prevent the system from being power via NFC.
U1
NHS3152UK
RESETN
AN0_0
AN0_1
AN0_2
AN0_3
AN0_4
AN0_5
PIO0_2/SSEL
PIO0_6/SCLK
PIO0_8/MISO
PIO0_9/MOSI
RSVD
VDDBAT
PIO0_0/WAKEUP
PIO0_1/CLKOUT
PIO0_4/SCL
PIO0_5/SDA
PIO0_3/CT16B_M0
PIO0_7/CT16B_M1
PIO0_10/CT32B_M0/SWCLK
PIO0_11/CT32B_M1/SWDIO
VSS
LA
LB
RESET
MEAS_VDD
SCLK
VEXT
MOSI
MISO
WAKE_UP
CS_ACC
CS_MEM
SWCLK
SWDIO
GND
1.8V - 3.6V
C4
300pF
ANT1
Antenna
C3
0.10µF
R1
10k
R1 and CS_MEM are used to pre-charge VEXT
U2
CY15B104QI-20LPXC
VDD
DNU
CS
SCK
WP
SI
SO
VSS
U3
LIS2DW12TR
VDDIO
SCL/SPC
SDA/SDI/SDO
SDO/SA0
RES
INT2
INT1
NC
R2
1.5M
R3
470k
AN0_0
C6
0.10µF
PIO0_4 is a open-drain pin. The accelerometer has an internal pull-up.
U6
XC6136N19
CN1
FPC Connector
SWDIO
SWCLK
DEBUG
CS_MEM
RESET
SCLK
WAKE_UP
MOSI
MISO
CS_ACC
VSTORE
TEG+
TEG-
Unless otherwise noted: All capacitors and resistors are 0402
Embedded and Networked System
TU Delft
Dental Sensor
Digital
ENGINEER: Christian Peppelman
DATE: 08-06-2023
REVISION: V400
SIZE: A4

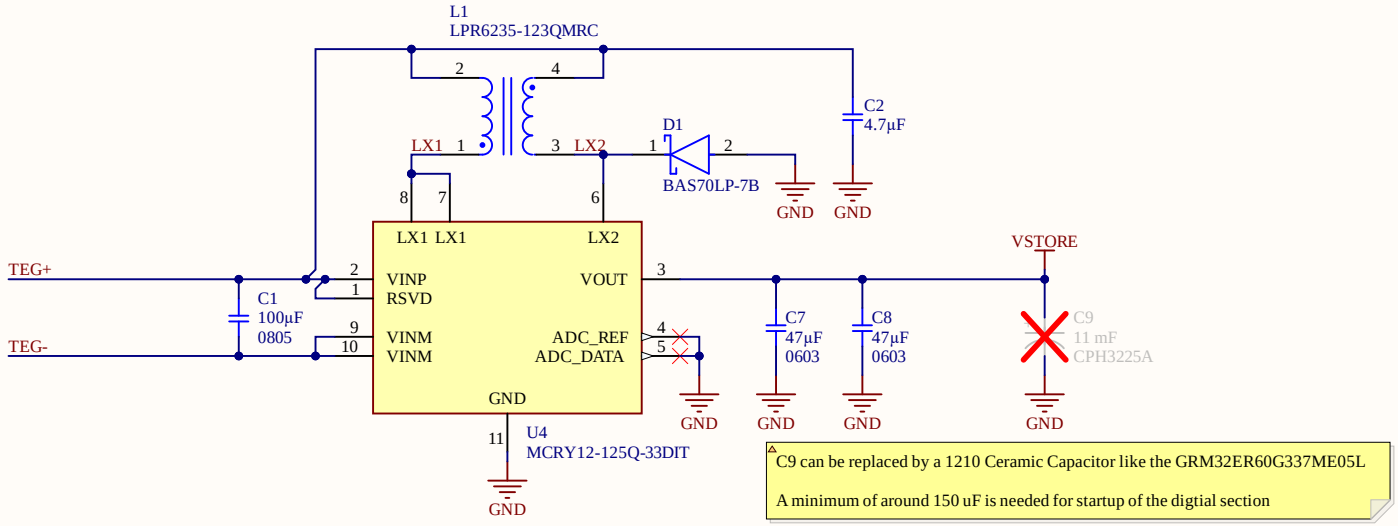

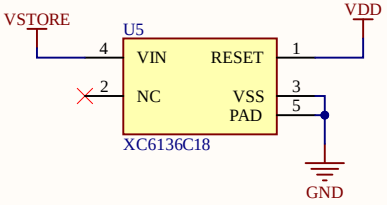

Unless otherwise noted: All capacitors and resistors are 0402

Embedded and Networked System

TU Delft

Dental Sensor

Energy Harvesting

ENGINEER: Christian Peppelman	DATE: 08-06-2023
REVISION: V400	SIZE: A4