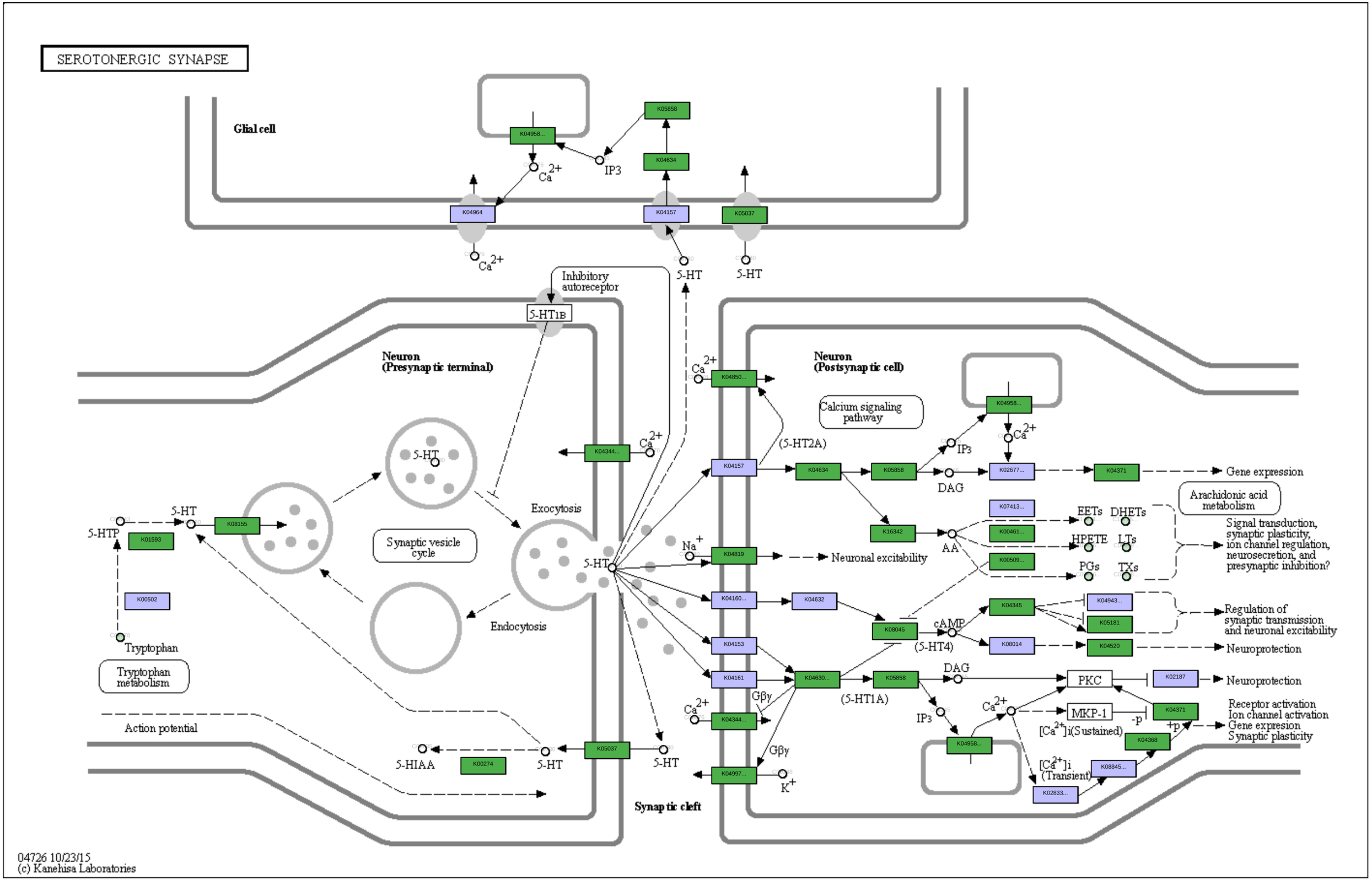

04726 10/23/15
(c) Kanehisa Laboratories