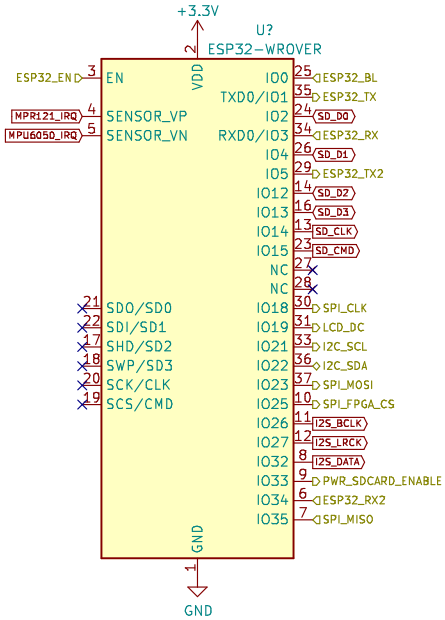

I2C, IRQ and ESP32 BOOT pin pull-up

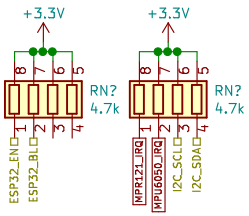

ESP32 bootstrapping pins

IO 0:Low for uart dl, high for normal boot
IO 2: Always pull-down during boot
IO 12: Selects internal flash/ram voltage. Pull-up for 3.3v, pull-down for 1.8v
IO 15: Pull down for silent bootloader

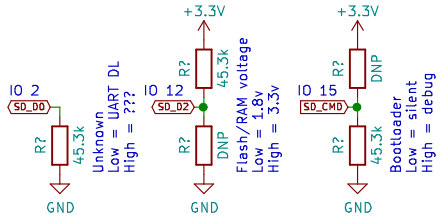

MPU6050 accelerometer and gyroscope

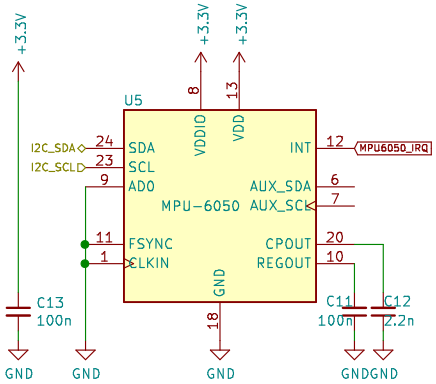

SAO connector

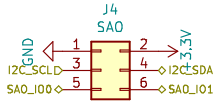

I2S Audio DAC

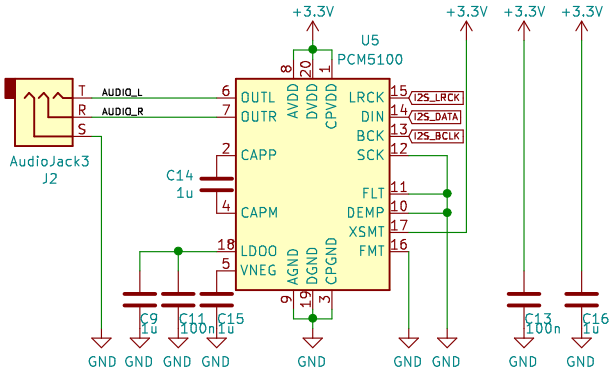

MPR121 touch button interface

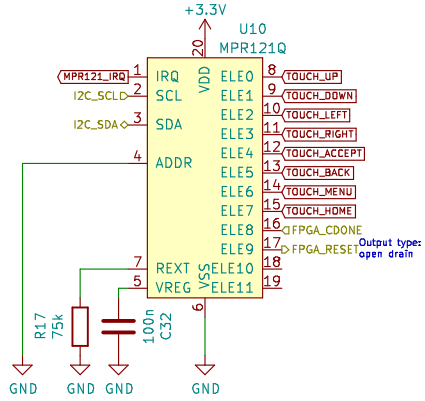

SD card slot / JTAG port

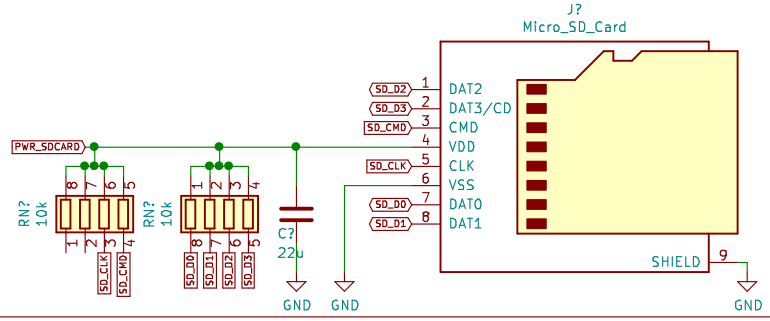

BADGE.TEAM

Sheet: /

File: esp32.sch

Title: MCH2021 badge – ESP32 microcontroller

Size: A4	Date: 2020-08-08	**Rev: 1**
KiCad E.D.A. eeschema 5.1.6		Id: 1/1