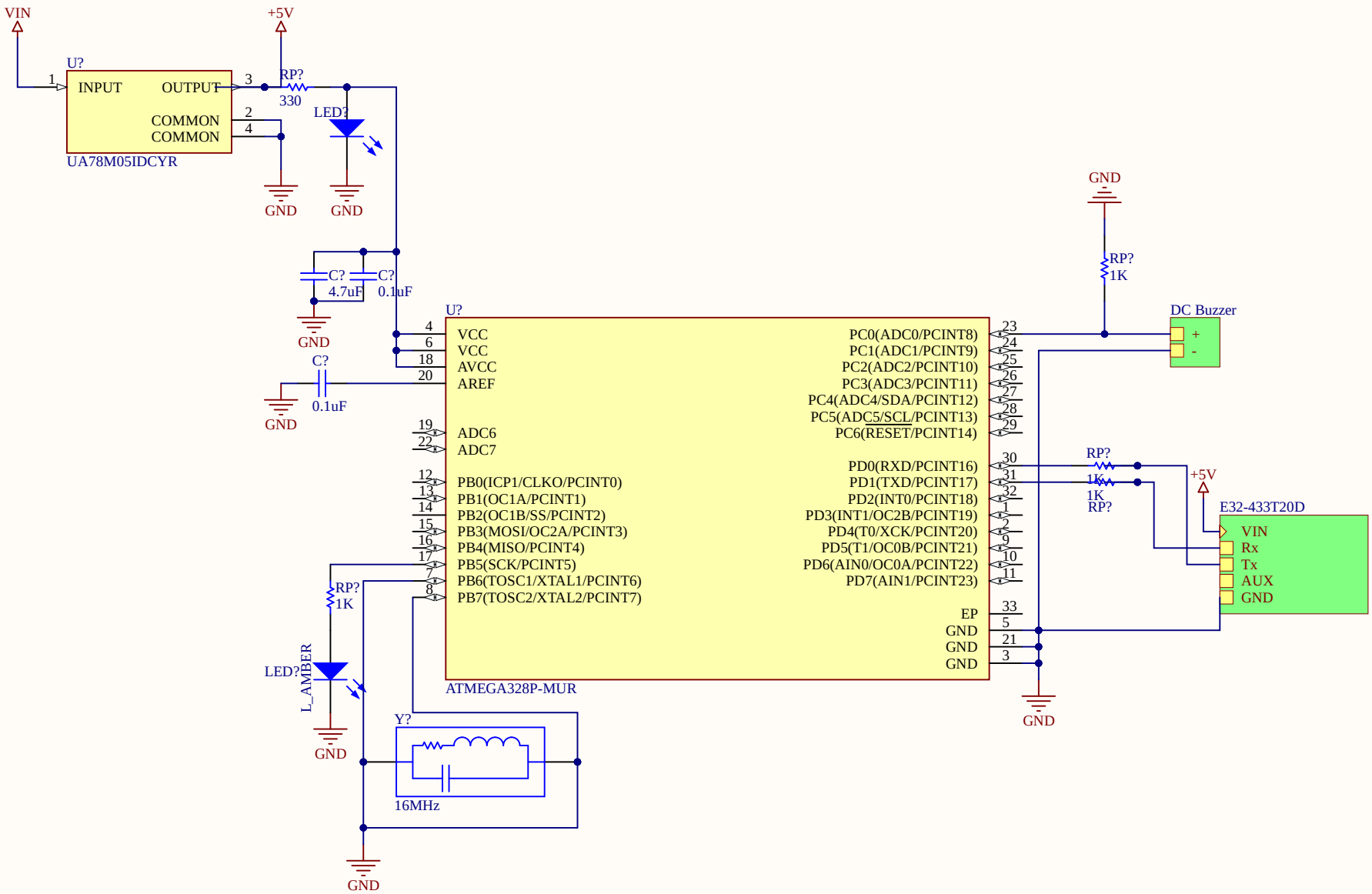

Title		
Size A	Number	Revision
Date: 3/25/2025		Sheet of
File: E:\University\..\Transmitter.SchDoc		Drawn By: