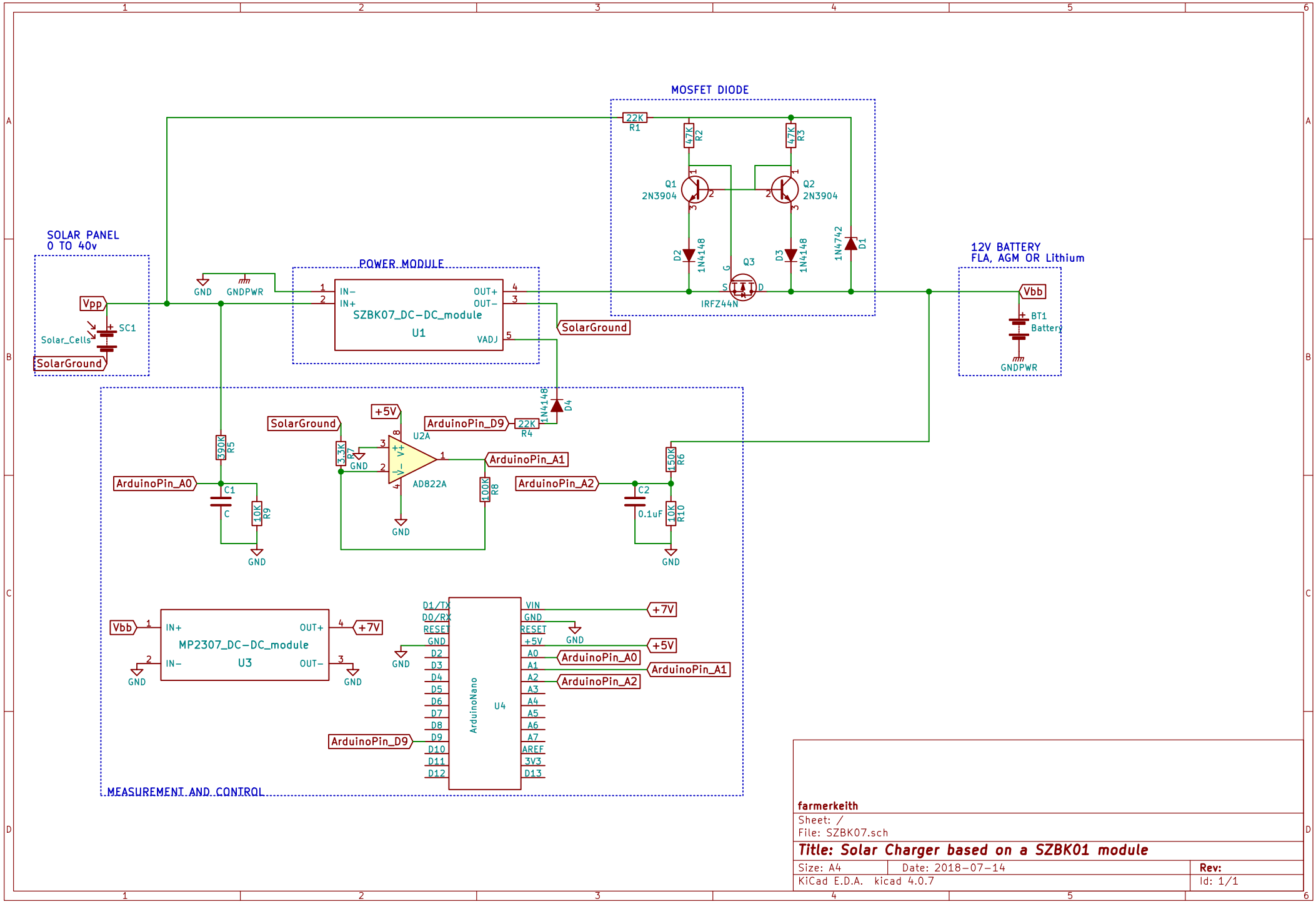

farmerkeith

Sheet: /

File: SZBK07.sch

Title: Solar Charger based on a SZBK01 module

Size: A4	Date: 2018−07−14	**Rev:**
KiCad E.D.A. kicad 4.0.7		Id: 1/1