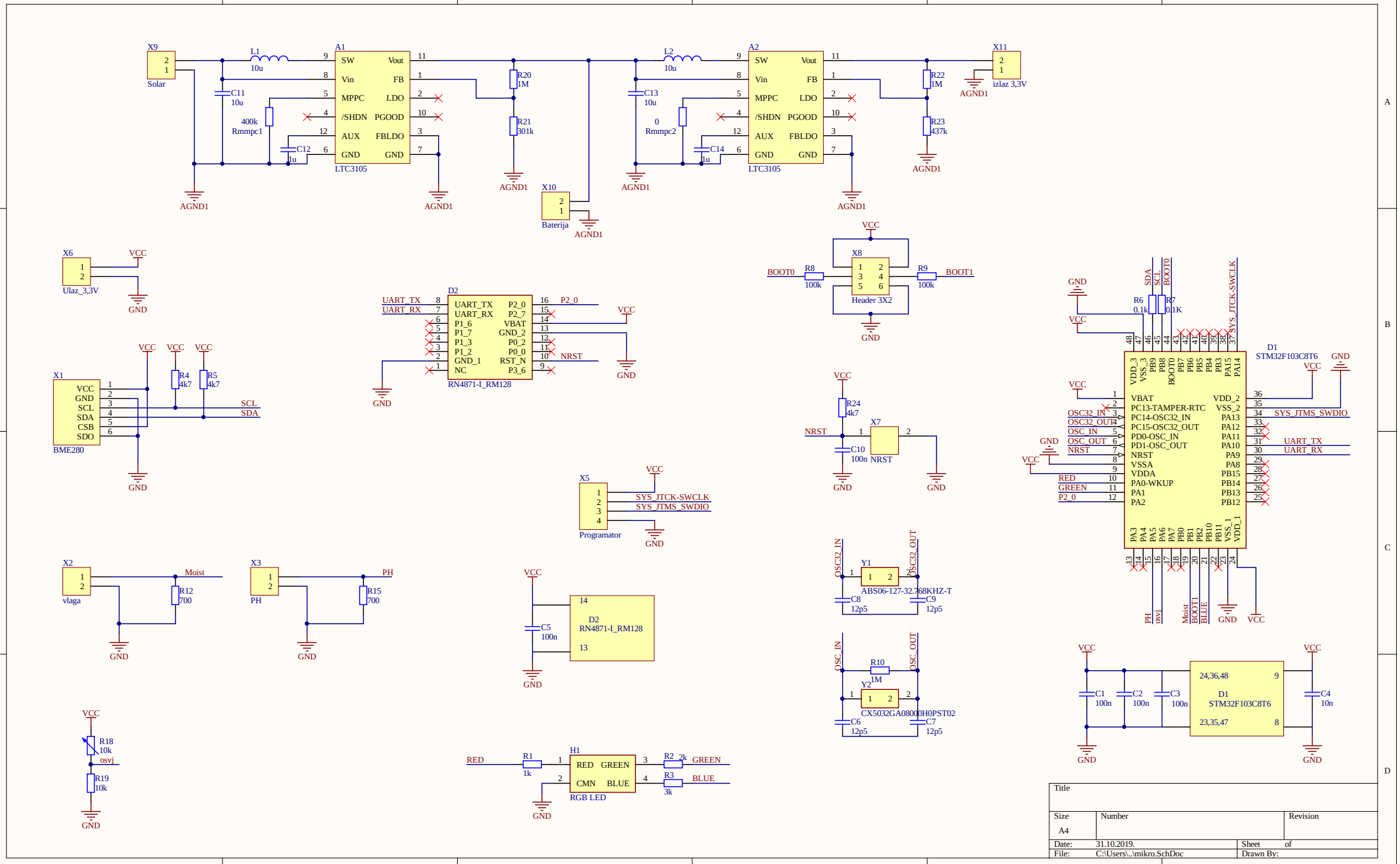
X9
Solar
L1
10u
A1
LTC3105
SW
Vin
MPPC
/SHDN
AUX
GND
Vout
FB
LDO
PGOOD
FBLDO
GND
C11
10u
400k
Rmmpc1
C12
1u
R20
1M
R21
301k
AGND1
X10
Baterija
L2
10u
A2
LTC3105
C13
10u
0
Rmmpc2
C14
1u
R22
1M
R23
437k
X11
izlaz 3,3V
X6
Ulaz_3,3V
VCC
GND
D2
RN4871-I_RM128
UART_TX
UART_RX
P2_0
P2_7
P1_6
P1_7
P1_3
P1_2
GND_1
NC
VBAT
GND_2
P0_2
P0_0
RST_N
P3_6
NRST
X8
Header 3X2
BOOT0
R8
100k
R9
100k
BOOT1
X1
BME280
VCC
GND
SCL
SDA
CSB
SDO
R4
4k7
R5
4k7
R24
4k7
X7
NRST
C10
100n
X5
Programator
SYS_JTCK-SWCLK
SYS_JTMS_SWDIO
D1
STM32F103C8T6
R6
0,1k
R7
0,1K
VDD_3
VSS_3
PB9
PB8
BOOT0
PB7
PB6
PB5
PB4
PB3
PA15
PA14
VBAT
PC13-TAMPER-RTC
PC14-OSC32_IN
PC15-OSC32_OUT
PD0-OSC_IN
PD1-OSC_OUT
NRST
VSSA
VDDA
PA0-WKUP
PA1
PA2
VDD_2
VSS_2
PA13
PA12
PA11
PA10
PA9
PA8
PB15
PB14
PB13
PB12
OSC32_IN
OSC32_OUT
OSC_IN
OSC_OUT
RED
GREEN
PA3
PA4
PA5
PA6
PA7
PB0
PB1
PB2
PB10
PB11
VSS_1
VDD_1
PH
osvj
Moist
BOOT1
BLUE
X2
vlaga
Moist
R12
700
X3
PH
R15
700
Y1
ABS06-127-32.768KHZ-T
C8
12p5
C9
12p5
Y2
CX5032GA08000H0PST02
R10
1M
C6
12p5
C7
12p5
C5
100n
D2
RN4871-I_RM128
C1
100n
C2
100n
C3
100n
C4
10n
24,36,48
23,35,47
R18
10k
R19
10k
H1
RGB LED
RED
GREEN
CMN
BLUE
R1
1k
R2
2k
R3
3k
Title
Size
A4
Number
Revision
Date:
31.10.2019.
Sheet
of
File:
C:\Users\..\mikro.SchDoc
Drawn By:

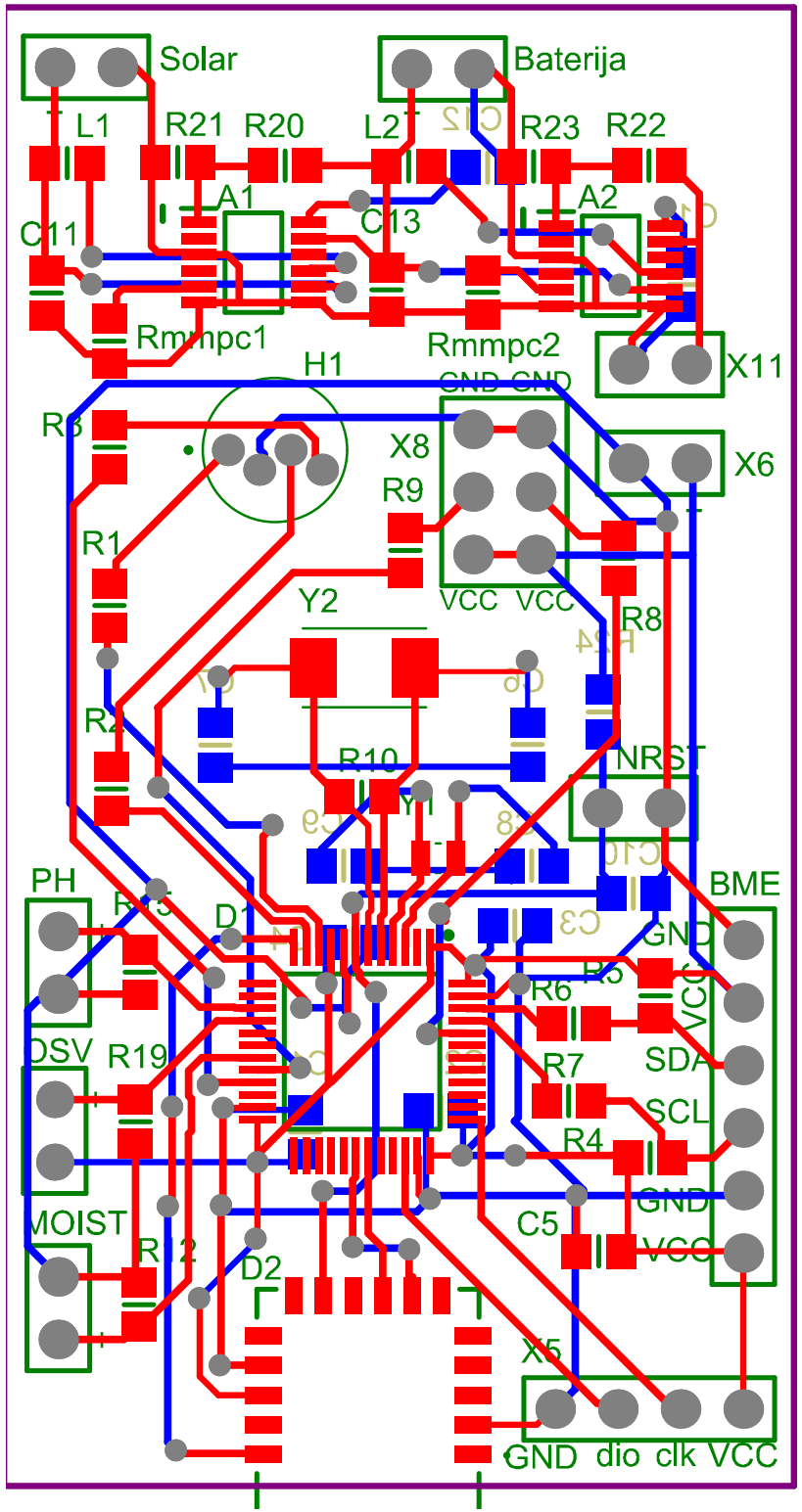
Solar
Baterija
L1
R21
R20
L2
R23
R22
A1
A2
C11
C13
Rmmpc1
Rmmpc2
H1
X11
GND GND
R5
X8
X6
R9
R1
VCC VCC
Y2
R8
R2
R10
NRST
PH
BME
D1
GND
R6
R5
VCC
DSV
R19
R7
SDA
SCL
R4
GND
MOIST
C5
VCC
R12
D2
X5
GND dio clk VCC

C12
C14
R24
C7
C6
C9
C8
C10
C3
C4
C
C2

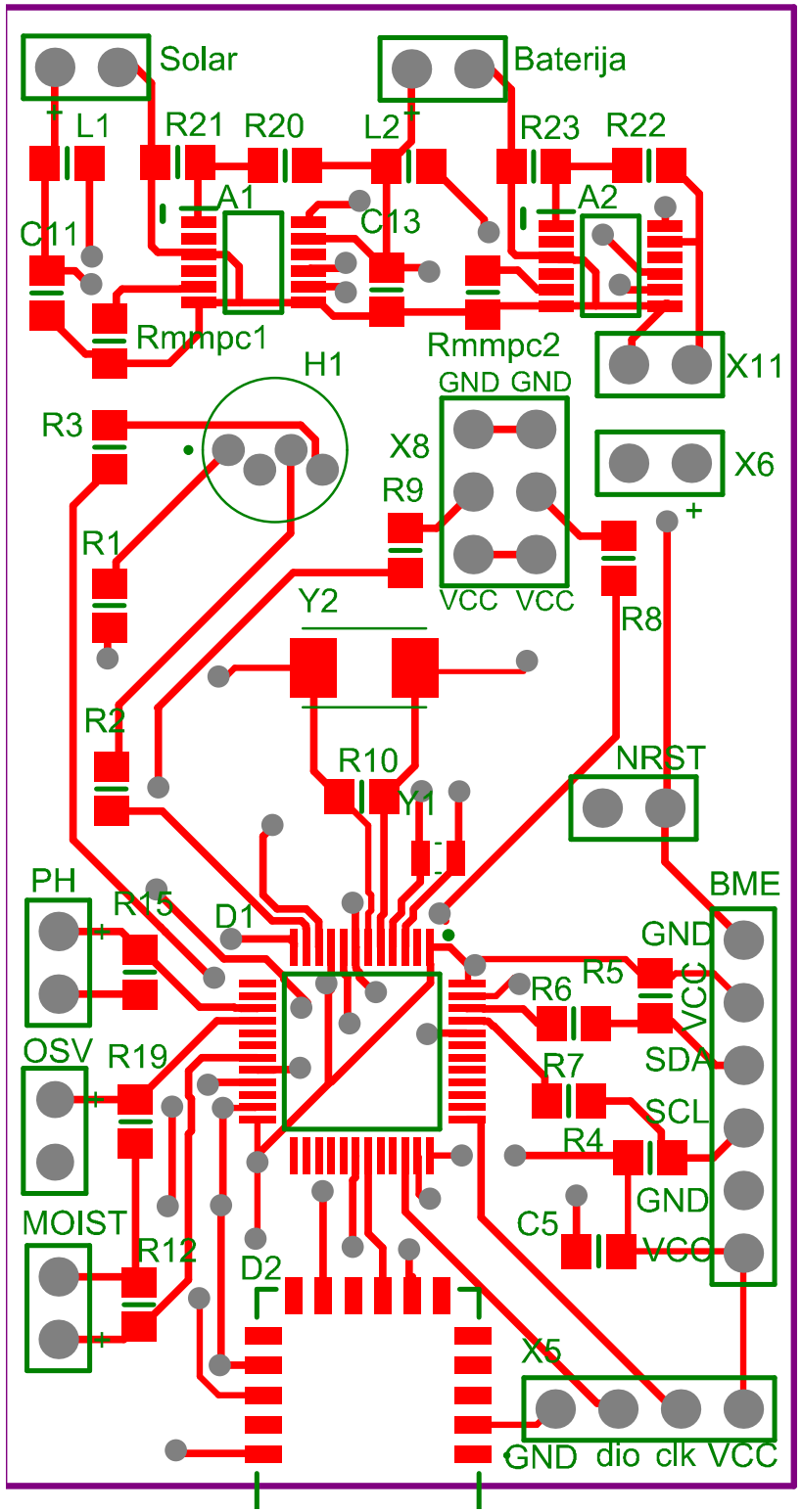
Solar
Baterija
L1
R21
R20
L2
R23
R22
A1
A2
C11
C13
Rmmpc1
Rmmpc2
X11
H1
GND GND
R3
X8
X6
R9
R1
VCC VCC
R8
Y2
R2
R10
NRST
Y1
PH
R15
D1
BME
GND
R5
R6
VCC
OSV
R19
R7
SDA
SCL
R4
GND
MOIST
C5
VCC
R12
D2
X5
GND dio clk VCC