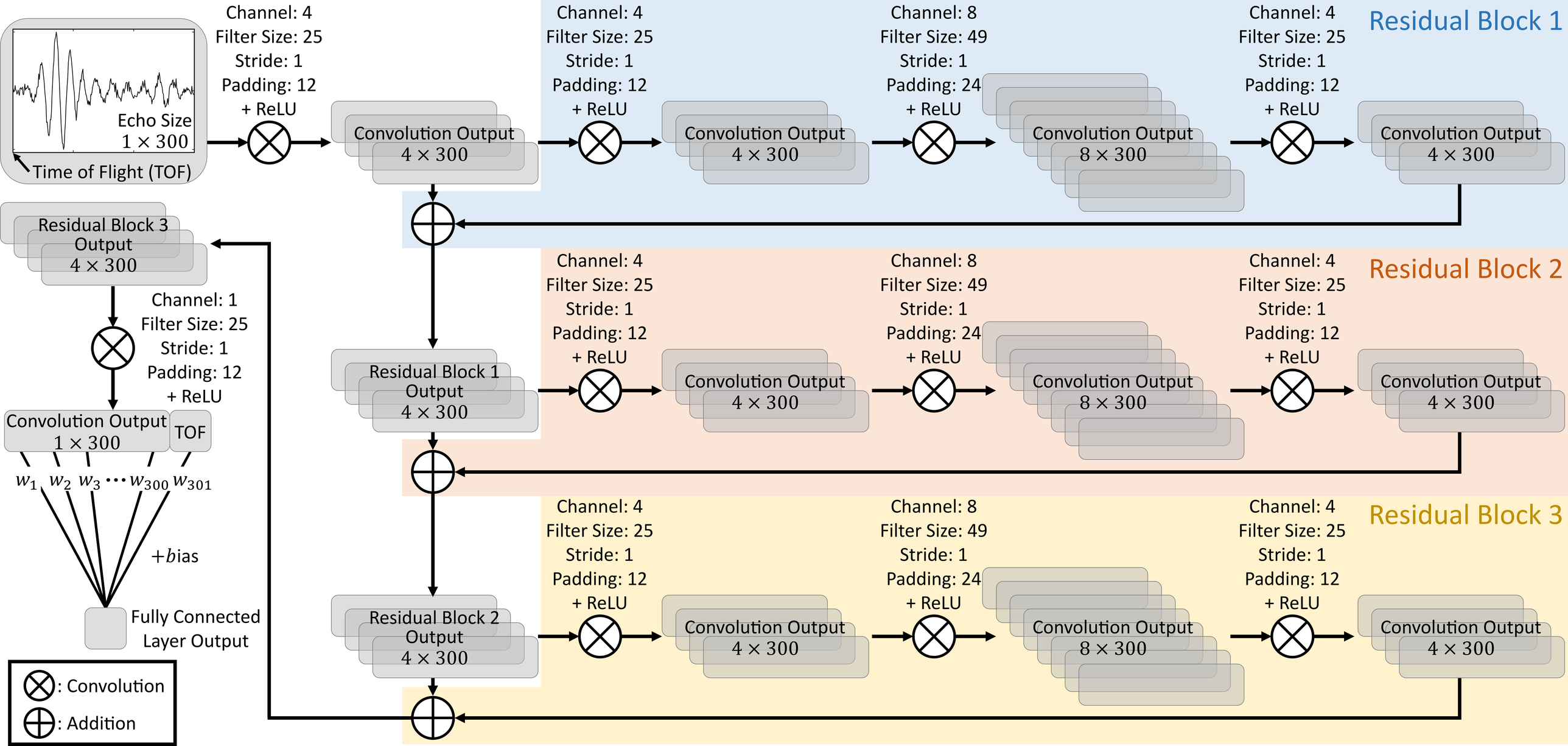
Echo Size
1 × 300
Time of Flight (TOF)
Channel: 4
Filter Size: 25
Stride: 1
Padding: 12
+ ReLU
Convolution Output
4 × 300
Channel: 4
Filter Size: 25
Stride: 1
Padding: 12
+ ReLU
Convolution Output
4 × 300
Channel: 8
Filter Size: 49
Stride: 1
Padding: 24
+ ReLU
Convolution Output
8 × 300
Channel: 4
Filter Size: 25
Stride: 1
Padding: 12
+ ReLU
Convolution Output
4 × 300
Residual Block 1
Residual Block 3
Output
4 × 300
Channel: 1
Filter Size: 25
Stride: 1
Padding: 12
+ ReLU
Convolution Output
1 × 300
TOF
w_1 w_2 w_3 ··· w_{300} w_{301}
$+bias$
Fully Connected
Layer Output
Residual Block 1
Output
4 × 300
Channel: 4
Filter Size: 25
Stride: 1
Padding: 12
+ ReLU
Convolution Output
4 × 300
Channel: 8
Filter Size: 49
Stride: 1
Padding: 24
+ ReLU
Convolution Output
8 × 300
Channel: 4
Filter Size: 25
Stride: 1
Padding: 12
+ ReLU
Convolution Output
4 × 300
Residual Block 2
Residual Block 2
Output
4 × 300
Channel: 4
Filter Size: 25
Stride: 1
Padding: 12
+ ReLU
Convolution Output
4 × 300
Channel: 8
Filter Size: 49
Stride: 1
Padding: 24
+ ReLU
Convolution Output
8 × 300
Channel: 4
Filter Size: 25
Stride: 1
Padding: 12
+ ReLU
Convolution Output
4 × 300
Residual Block 3
: Convolution
: Addition